Gryphon™ 2D Family
Gryphon I GD/GBT/GM4600

PRODUCT REFERENCE GUIDE



General Purpose Handheld
Area Imager Bar Code Reader

DATALOGIC

Datalogic S.r.l.
Via S. Vitalino, 13
40012 Calderara di Reno (BO)
Italy
Tel. +39 051 3147011
Fax +39 051 3147205

© 2026 Datalogic S.p.A. and /or its affiliates

All rights reserved. Without limiting the rights under copyright, no part of this documentation may be reproduced, stored in or introduced into a retrieval system, or transmitted in any form or by any means, or for any purpose, without the express written permission of Datalogic S.p.A. and/or its affiliates.

Owners of Datalogic products are hereby granted a non-exclusive, revocable license to reproduce and transmit this documentation for the purchaser's own internal business purposes. Purchaser shall not remove or alter any proprietary notices, including copyright notices, contained in this documentation and shall ensure that all notices appear on any reproductions of the documentation.

Electronic versions of this document may be downloaded from the Datalogic website (www.datalogic.com). If you visit our website and would like to make comments or suggestions about this or other Datalogic publications, please let us know via the "Contact" page.

Disclaimer

Datalogic has taken reasonable measures to provide information in this manual that is complete and accurate, however, Datalogic shall not be liable for technical or editorial errors or omissions contained herein, nor for incidental or consequential damages resulting from the use of this material. Datalogic reserves the right to change any specification at any time without prior notice.

Trademarks

Datalogic and the Datalogic logo are registered trademarks of Datalogic S.p.A. in many countries, including the U.S.A. and the E.U.

Gryphon is a trademark of Datalogic S.p.A. and/or its affiliates, registered in the U.S. The Bluetooth word mark and logos are owned by Bluetooth SIG, Inc. and any use of such marks by Datalogic S.p.A. and/or its affiliates is under license. All other trademarks and brands are property of their respective owners.

Patents

See www.patents.datalogic.com for patent list.

TABLE OF CONTENTS

PREFACE XIII
- **About this Manual ..... xiii**
- **overview ..... xiii**
  - Manual Conventions xiv
- **Technical Support ..... xiv**
  - Support Through the Website xiv
  - Reseller Technical Support xiv
  - Warranty xv

CHAPTER 1. INTRODUCTION 1
- **About the Reader 1**
- **Using the Gryphon™ I GD/gbt/gm 4600 Reader 1**
- **Omni-Directional Operating 1**
- **Imaging 1**
- **Battery Safety 2**
- **Programming the Reader 4**
  - Configuration Methods 4
    - Programming Bar Codes 4
    - Datalogic Aladdin™ 4

CHAPTER 2. SETUP 5
- **Unpacking 5**
- **Setting Up the Gryphon™ GD4600 reader 5**
- **Connecting Host Interface 6**
  - RS-232 Serial Connection 7
  - USB Connection 7
- **Setting Up the Gryphon™ GM/GBT4600 Reader 8**
- **Positioning the Base Station 8**
  - Base Station Positions and Related Clips to be Used 8
    - How to secure the base station 10
  - Instructions for Wall or Desk Magnet Configuration change 12
    - Desk Configuration 12
    - Wall Configuration 13
- **Reader, base station and LEDs Description 15**
- **Connecting the Base Station 16**
  - Base Station Connection and Routing 16
  - Securing the DC Power Cord (Optional) 17
    - Host Connection 18
    - Power Connection 18
- **System and Network Layouts 19**
  - Stand Alone Layouts 19
- **Using the GBT/GM4600 Reader 20**
  - Reader LEDs 20
- **Using the WLC4690 Radio Base 21**
  - Radio Base LEDs 21
- **Replacing the Battery Pack 22**
- **Using the Gryphon™ I GD/GBT/GM4600 ..... 24**
- **Linking the Reader 26**

Link Datalogic Devices to Base 26
Link Reader as Serial Device to a Bluetooth Host 26
Link Reader as HID device to a Bluetooth host 27
Bluetooth Passkey or PIN Code Entry Request 28
Power Off 28
Interface Selection 29
Configuring the Interface 30
Customizing Configuration Settings 33
Using the Programming Bar Codes 33
Datalogic Aladdin™ Utility 33
Interface Settings 34
Configuring Other Features 35
Software Version Transmission 35
Resetting the Product Configuration to Defaults 36
Restore Custom Default Configuration 36
Restore Factory Configuration 36

CHAPTER 3. CONFIGURATION WITH BAR CODES 37
Configuration Parameters 37
Interface Configuration: 37
Parameters common to all interface applications: 37
Symbology-specific parameters: 38
GLOBAL INTERFACE FEATURES 39
Host Commands — Obey/Ignore 39
USB Suspend Mode 39
RS-232 INTERFACE 40
RS-232 STANDARD SETTINGS 41
Baud Rate 41
Data Bits 42
Stop Bits 42
Parity 43
Handshaking Control 44
RS-232/USB-COM INTERFACES 45
RS-232/USB-COM SETTINGS 46
Intercharacter Delay 46
Beep On ASCII BEL 47
Beep On Not on File 47
ACK NAK Options 48
ACK Character 49
NAK Character 49
ACK NAK Timeout Value 50
ACK NAK Retry Count 50
ACK NAK Error Handling 51
Indicate Transmission Failure 51
Disable Character 52
Enable Character 52
KEYBOARD INTERFACE 53
COUNTRY MODE 54
Setup on PC to use ALT Universal 54
Setting Country Mode 55
OTHER KEYBOARD PARAMETERS 69
Encoding Type 69
ALT Output Type 76
Keyboard Numeric Keypad 77
Keyboard Send Control Characters 78
USB Keyboard Speed 79
USB-OEM INTERFACE 81
USB-OEM Device Usage 82
DATA FORMAT 83
GLOBAL SETTINGS 84
Global Prefix/Suffix 84

Case Conversion 85
Character Conversion 85
Global AIM ID 86
GS1-128 AIM ID 86
LABEL ID 87
Label ID: Pre-loaded Sets 87
Label ID: Set Individually Per Symbology 88
Label ID Control 88
Label ID Symbology Selection 89
READING PARAMETERS 94
SCANNING FEATURES 95
Scan Mode 95
Scanning Active Time 96
Flash On Time 96
Flash Off Time 97
Double Read Timeout 97
Stand /Base Detection Behavior 99
Stand Mode/Object Detection Indication (Stand Mode Flash) 100
Stand Mode/Object Detection Sensitivity 100
Stand Mode/Object Detection Illumination Off Time 101
Illumination Intensity 101
Corded Stand Mode 102
Dock Detection Beep 103
Corded Stand Beep 103
LED AND BEEPER INDICATORS 104
Power On Alert 104
Good Read Beep Type 104
Good Read Beep Frequency 105
Good Read Beep Length 106
Good Read Beeper Volume / Vibration 107
Vibration Feedback for Good Read 107
Silent Mode 108
RGB Good Read Enable 108
RGB Good Read Color 109
Good Read LED Duration 110
Good Read: When to Indicate 111
Green Spot Duration 112
CAMERA CONTROL 113
Aiming Pointer 113
Aiming Intensity 113
Pick Mode 114
Mobile Phone Mode 114
Mobile Phone Saturation Rate 115
Set the Illuminator Color 115
Decode Negative Image 116
Image Capture 116
MULTIPLE LABEL READING 117
Multiple Labels per Frame 117
Multiple Labels Ordering by Code Symbology 118
Multiple Labels Ordering by Code Length 118
CONFIGURATION FOR BEDSIDE POINT OF CARE (BPOC) APPLICATIONS 119
BPOC for GD4600 models 119
USB Keyboard Interface 119
USB-OEM 119
BPOC for GBT-GM4600 models 120
USB-OEM 120
1D SYMBOLOGIES 121
DISABLE ALL SYMBOLOGIES 122
COUPON CONTROL 122
Coupon Control 122
UPC-A 123

UPC-A Enable/Disable 123
UPC-A Check Character Transmission 123
Expand UPC-A to EAN-13 124
UPC-A Number System Character Transmission 124
UPC-E 125
UPC-E Enable/Disable 125
UPC-E Check Character Transmission 125
Expand UPC-E to EAN-13 126
Expand UPC-E to UPC-A 126
UPC-E Number System Character Transmission 126
GTIN Formatting 127
EAN-13 128
EAN-13 Enable/Disable 128
EAN-13 Check Character Transmission 128
EAN-13 Flag 1 Character 129
EAN-13 to ISBN Conversion 129
EAN-13 to ISSN Conversion 130
EAN-8 131
EAN-8 Enable/Disable 131
EAN-8 Check Character Transmission 131
Expand EAN-8 to EAN-13 132
UPC/EAN GLOBAL SETTINGS 133
UPC/EAN Price Weight Check 133
UPC/EAN Quiet Zones 134
Add-Ons 135
Optional Add-ons 135
Optional Add-On Timer 136
GS1 DATABAR™ OMNIDIRECTIONAL 137
GS1 DataBar Omnidirectional Enable/Disable 137
GS1 DataBar Omnidirectional to GS1-128 Emulation 137
GS1 DATABAR™ EXPANDED 138
GS1 DataBar Expanded Enable/Disable 138
GS1 DataBar Expanded to GS1-128 Emulation 138
GS1 DataBar Expanded Length Control 139
GS1 DataBar Expanded Set Length 1 139
GS1 DataBar Expanded Set Length 2 140
GS1 DATABAR™ LIMITED 141
GS1 DataBar Limited Enable/Disable 141
GS1 DataBar Limited to GS1-128 Emulation 141
CODE 39 142
Code 39 Enable/Disable 142
Code 39 Check Character Calculation 142
Code 39 Check Character Transmission 143
Code 39 Start/Stop Character Transmission 143
Code 39 Full ASCII 144
Code 39 Quiet Zones 144
Code 39 Length Control 145
Code 39 Set Length 1 145
Code 39 Set Length 2 146
TRIOPTIC CODE 147
Trioptic Code Enable/Disable 147
CODE 39 DANISH PPT 147
Code 39 Danish PPT Enable/Disable 147
CODE 39 PZN 148
Code 39 PZN Enable/Disable 148
CODE 39 LA POSTE 148
Code 39 La Poste Enable/Disable 148
CODE 32 (ITALIAN PHARMACEUTICAL) 149
Code 32 Enable/Disable 149
Code 32 Feature Setting Exceptions 149
Code 32 Check Character Transmission 149

Code 32 Start/Stop Character Transmission 150
CODE 39 CIP HR (FRENCH PHARMACEUTICAL) 151
Code 39 CIP HR Enable/Disable 151
CODE 128 152
Code 128 Enable/Disable 152
Expand Code 128 to Code 39 152
Code 128 Check Character Transmission 153
Code 128 Function Character Transmission 153
Code 128 Quiet Zones 154
Code 128 Length Control 154
Code 128 Set Length 1 155
Code 128 Set Length 2 155
GS1-128 156
GS1-128 Enable 156
INTERLEAVED 2 OF 5 (I 2 OF 5) 157
I 2 of 5 Enable/Disable 157
I 2 of 5 Check Character Calculation 158
I 2 of 5 Check Character Transmission 159
I 2 of 5 Length Control 160
I 2 of 5 Set Length 1 160
I 2 of 5 Set Length 2 161
INTERLEAVED 2 OF 5, FEBRABAN (DESK MODELS ONLY) 162
Interleaved 2 of 5, Febraban format Enable / Disable 162
INTERLEAVED 2 OF 5 CIP HR 163
Interleaved 2 of 5 CIP HR Enable/Disable 163
MATRIX 2 OF 5 164
Matrix 2 of 5 Enable/Disable 164
Matrix 2 of 5 Check Character Calculation 164
Matrix 2 of 5 Check Character Transmission 165
Matrix 2 of 5 Length Control 165
Matrix 2 of 5 Set Length 1 166
Matrix 2 of 5 Set Length 2 166
STANDARD 2 OF 5 167
Standard 2 of 5 Enable/Disable 167
Standard 2 of 5 Check Character Calculation 167
Standard 2 of 5 Check Character Transmission 168
Standard 2 of 5 Length Control 168
Standard 2 of 5 Set Length 1 169
Standard 2 of 5 Set Length 2 169
COMPRESSED 2 OF 5 170
Compressed 2 of 5 Enable/Disable 170
Compressed 2 of 5 Check Character Calculation 170
Compressed 2 of 5 Check Character Transmission 171
Compressed 2 of 5 Length Control 171
Compressed 2 of 5 Set Length 1 172
Compressed 2 of 5 Set Length 2 172
DATALOGIC 2 OF 5 173
Datalogic 2 of 5 Enable/Disable 173
Datalogic 2 of 5 Check Character Calculation 173
Datalogic 2 of 5 Check Character Transmission 174
Datalogic 2 of 5 Length Control 174
Datalogic 2 of 5 Set Length 1 175
Datalogic 2 of 5 Set Length 2 175
INDUSTRIAL 2 OF 5 176
Industrial 2 of 5 Enable/Disable 176
Industrial 2 of 5 Check Character Calculation 176
Industrial 2 of 5 Check Character Transmission 177
Industrial 2 of 5 Length Control 177
Industrial 2 of 5 Set Length 1 178
Industrial 2 of 5 Set Length 2 178

IATA 179
IATA Enable/Disable 179
IATA Check Character Transmission 179
FOLLETT 2 OF 5 180
Follett 2 of 5 Enable/Disable 180
CODABAR 181
Codabar Enable/Disable 181
Codabar Check Character Calculation 181
Codabar Check Character Transmission 182
Codabar Start/Stop Character Transmission 182
Codabar Start/Stop Character Set 183
Codabar Start/Stop Character Match 183
Codabar Quiet Zones 184
Codabar Length Control 185
Codabar Set Length 1 185
Codabar Set Length 2 186
ABC CODABAR 187
ABC Codabar Enable/Disable 187
ABC Codabar Concatenation Mode 187
ABC Codabar Dynamic Concatenation Timeout 188
ABC Codabar Force Concatenation 188
ISBT 128 189
ISBT 128 Concatenation 189
ISBT 128 Concatenation Mode 189
ISBT 128 Dynamic Concatenation Timeout 190
ISBT 128 Force Concatenation 191
ISBT 128 Advanced Concatenation Options 191
CODE 11 192
Code 11 Enable/Disable 192
Code 11 Check Character Calculation 192
Code 11 Check Character Transmission 193
Code 11 Length Control 193
Code 11 Set Length 1 194
Code 11 Set Length 2 194
CODE 93 195
Code 93 Enable/Disable 195
Code 93 Check Character Calculation 195
Code 93 Check Character Transmission 196
Code 93 Length Control 196
Code 93 Set Length 1 197
Code 93 Set Length 2 197
Code 93 Quiet Zones 198
MSI 199
MSI Enable/Disable 199
MSI Check Character Calculation 199
MSI Check Character Transmission 200
MSI Length Control 200
MSI Set Length 1 201
MSI Set Length 2 201
PHARMACODE 202
Pharmacode Enable/Disable 202
Pharmacode Label Direction 202
Pharmacode Length Control 203
Pharmacode Set Length 1 203
Pharmacode Set Length 2 204
PLESSEY 205
Plessey Enable/Disable 205
Plessey Check Character Calculation 205
Plessey Check Character Transmission 206
Plessey Length Control 206
Plessey Set Length 1 207

Plessey Set Length 2 207
BC412 208
BC412 Enable/Disable 208
BC412 Check Character Calculation 208
BC412 Length Control 209
BC412 Set Length 1 209
BC412 Set Length 2 210
2D SYMBOLOGIES 211
2DTABLE ON PAGE 237 GLOBAL FEATURES 212
2D Structured Append 213
2D Normal/Inverse Symbol Control 213
AZTEC CODE 214
Aztec Code Enable / Disable 214
Aztec Code Length Control 214
Aztec Code Set Length 1 215
Aztec Code Set Length 2 215
CHINA SENSIBLE CODE 216
China Sensible Code Enable / Disable 216
China Sensible Code Length Control 216
China Sensible Code Set Length 1 217
China Sensible Code Set Length 2 217
DATA MATRIX 218
Data Matrix Enable / Disable 218
Data Matrix Square/Rectangular Style 218
Data Matrix Length Control 219
Data Matrix Set Length 1 219
Data Matrix Set Length 2 220
GS1 DOTCODE 221
DotCode Enable 221
DotCode High Resolution Enable 221
DotCode Position-based Decoding 222
Additional Options 222
MAXICODE 223
Maxicode Enable / Disable 223
Maxicode Length Control 223
Maxicode Set Length 1 224
Maxicode Set Length 2 225
PDF417 226
PDF417 Enable / Disable 226
PDF417 Length Control 226
PDF417 Set Length 1 227
PDF417 Set Length 2 228
MICRO PDF417 229
Micro PDF417 Enable / Disable 229
Micro PDF417 Code 128 GS1-128 Emulation 229
Micro PDF417 Length Control 230
Micro PDF417 Set Length 1 230
Micro PDF417 Set Length 2 231
QR CODE 232
QR Code Enable / Disable 232
QR Code Length Control 232
QR Code Set Length 1 233
QR Code Set Length 2 233
GS1 Digital Link - Allow QR Code with URL Link 234
MICRO QR CODE 235
Micro QR Code Enable / Disable 235
Micro QR Code Length Control 235
Micro QR Code Set Length 1 236
Micro QR Code Set Length 2 236
GS1 DIGITAL LINK 237
GS1 Digital Link Transmit Mode 237

GS1 Digital Link Set Labels Read Timeout 238
GS1 Digital Link Set Double Read Timeout 238
GS1 Digital Link Transmit Format 239
GS1 Digital Link Label Set ID Character for Mode 3 240
UCC COMPOSITE 241
UCC Optional Composite Timer 241
Postal Code Selection 242
Postnet BB Control 243
OCR DECODING 244
OCR Decoding Predefined Templates 245
MOTION FEATURES 246
Motionless Timeout 247
Motion Sensitivity 247
High Motion Immunity 248
Motion Aiming Control 248
POWER MANAGEMENT 249
POWER SAVE 250
Powerdown Timeout 250
BATTERY PROFILES 251
Battery Profiles 251
Battery Information 252
WIRELESS FEATURES 253
WIRELESS BEEPER FEATURES 254
Good Transmission Beep 254
Beeper Frequency 254
Beep Duration 255
Beep Volume 256
Disconnect Beep 256
Docking (Connecting) Beep 257
Leash Alarm 257
Leash Alarm off time 259
Leash Alarm on time 259
CONFIGURATION UPDATES 260
Automatic Configuration Update 260
Copy Configuration to Reader 260
Copy Configuration to Base Station 260
BATCH FEATURES 261
Batch Mode 261
Send Batch 261
Erase Batch Memory 262
RF Batch Mode Transmit Delay 263
DIRECT RADIO AUTOLINK 264
Direct Radio Autolink 264
RF ADDRESS STAMPING 265
Source Radio Address Transmission 265
Source Radio Address Delimiter Character 265
BLUETOOTH-ONLY FEATURES 266
Bluetooth Security Level 266
Bluetooth Radio Output Power 267
Wi-Fi Channels Exclusion 268
BLUETOOTH HID FEATURES 273
Bluetooth HID Alt Mode 273
FEATURES FOR STAR MODELS ONLY 274
STAR Radio Protocol Timeout 274
STAR Radio Transmit Mode 275
STAR Frequency Agility 276

CHAPTER 4. REFERENCES 277
RS-232 Parameters 278
RS-232 Only 278
Baud Rate 278

Data Bits 278
Stop Bits 278
Parity 278
Handshaking Control 278
RS-232/USB COM Parameters 279
Intercharacter Delay 279
ACK NAK Options 280
ACK Character 280
NAK Character 281
ACK NAK Timeout Value 282
ACK NAK Retry Count 283
Disable Character 284
Enable Character 285
Data Format 286
Data Editing 286
Please Keep In Mind... 286
Global Prefix/Suffix 287
Example: Setting a Prefix 287
Global AIM ID 288
Label ID 289
Label ID: Pre-loaded Sets 289
Label ID: Set Individually Per Symbology 291
Character Conversion 293
Scanning Features 294
Scan Mode 294
Scanning Active Time 295
Aiming Duration Time 296
Flash On Time 297
Flash Off Time 298
LED and Beeper Indicators 299
Good Read LED Duration 299
RF Features 300
Automatic Configuration Update 300
RF Address Stamping 300
Source Radio Address Delimiter Character 300
STAR Radio Protocol Timeout 301
Symbologies 302
Set Length 302
Set Length 1 302
Set Length 2 303

CHAPTER 5. MESSAGE FORMATTING 304
Message from Host to Device 304
LED and Beeper Control 305

APPENDIX A. TECHNICAL SPECIFICATIONS 306
GD4600 Technical Specifications 306
GBT/GM4600 Technical Specifications 308
Common Reading Characteristics 310
Decoding Capabilities 311
LED and Beeper Indications 312
User Indications for GD4600 313
User Indications for GBT/GM4600 (Gun Only) 314
User Indications for WLC4690 Base Stations 316
Programming Mode 317
Troubleshooting 317
Overall Dimensions 319
Gun Mechanical Dimensions 319
Presentation Mode Base Mechanical Dimensions 320
Cradle Mechanical DImensions 321

APPENDIX B. STANDARD DEFAULTS 322
Default exceptions 335

APPENDIX C. SAMPLE BARCODES 337
Sample Barcodes 337
1D Barcodes 337
GS1 Databar™ (RSS) 339
GS1 Databar™ (-14) 340
2D Barcodes 341

APPENDIX D. KEYPAD 343

APPENDIX E. SCANCODE TABLES 345
Control Character Emulation 345
Single Press and Release Keys 345
Interface Type PC AT PS/2, USB-Keyboard or USB-Keyboard for APPLE 346
Interface Type PC AT PS/2, USB-Keyboard or USB-Keyboard for APPLE (continued) 347
Interface Type PC AT PS/2 Alt Mode or USB-Keyboard Alt Mode 348
Interface Type PC AT PS/2 Alt Mode or USB-Keyboard Alt Mode (continued) 349
Digital Interface 350
IBM31xx 102-key 351
IBM XT 353

APPENDIX F. ACCESSORIES 356
PM-BASE-GD46-BK Presentation Mode Base 356
General Features 356
Stand Mode/Object Detection 357
Video Tutorial 357
Mounting Instructions 358
WLC4690 CART CLIP 359
General Features 359
Video Tutorial 359
Mounting Instructions 360
Mounting Option 1 360
Mounting Option 2 360
WLC4690 Bracket Adapter (Compatible with WLC4190 Mounting System) 361
General Features 361
Video Tutorial 361
Mounting Instructions 362
WLC4690 Presentation mode enabler and bracket adapter 363
General Features 363
Video Tutorial 363
Mounting Instructions 364
Standing Positions 365
WLC4690-S7 Bracket Adapter (Compatible with Toshiba System 7 Mounting System) 366
General Features 366
Video Tutorial 366
Mounting Instructions 367

APPENDIX G. ASCII CHART 368

PREFACE

ABOUT THIS MANUAL

This Product Reference Guide (PRG) is provided for users seeking advanced technical information, including connection, programming, maintenance and specifications. The Quick Reference Guide (QRG) and other publications associated with this product are downloadable free of charge from the website listed on the back cover of this manual.

Typically, units are factory-programmed for the most common terminal and communications settings. If you need to modify any programmable settings, custom configuration can be accomplished by scanning the programming bar codes within this guide.

Programming can alternatively be performed using the Datalogic Aladdin™ Configuration application, which is available from the Datalogic website listed on the back cover of this manual. This multi-platform utility program allows device configuration using a PC. It communicates to the device using a serial or USB cable and can also create configuration bar codes to print.

OVERVIEW

Chapter 1, Introduction provides a product overview, battery safety information, and general information about programming the reader.

Chapter 2, Setup presents information about unpacking and setting up the reader, and interface configuration bar codes and details.

Chapter 3, Configuration Using Bar Codes provides instructions and bar code labels for customizing your reader. There are different sections for interface types, general features, data formatting, and symbology-specific features.

Chapter 4, References provides details concerning programmable features.

Chapter 5, provides information about Message Formatting.

Appendix A, Technical Specifications lists physical and performance characteristics, as well as environmental specifications. It also provides standard cable pin-outs and descriptions of the functions and behaviors of the reader's LED and Beeper indicators.

Appendix B, references common factory default settings for reader features and options.

Appendix C, Sample Bar Codes offers sample bar codes of several common symbologies.

Appendix D, Keypad includes numeric bar codes to be scanned for certain parameter settings.

Appendix E, Scancode Tables lists control character emulation information for USB Keyboard Interface.

Appendix F, contains all the accessories available for Gryphon 4600.

Appendix G, ASCII Chart lists hexadecimal reference values for ASCII characters.

Manual Conventions

The following conventions are used in this document:

The symbols listed below are used in this manual to notify the reader of key issues or procedures that must be observed when using the reader:



NOTE: This symbol draws attention to details or procedures that may be useful in improving, maintaining, or enhancing the performance of the hardware or software being discussed.



CAUTION: This symbol advises you of actions that could damage equipment or property.



WARNING: This symbol advises you of actions that could result in harm or injury to the person performing the task.



HIGH VOLTAGE: This symbol alerts the user they are about to perform an action involving, either a dangerous level of voltage, or to warn against an action that could result in damage to devices or electrical shock.



LASER: This symbol alerts the user they are about to perform an action involving possible exposure to laser light radiation.



GROUNDING: This symbol advises you to pay particular attention to the grounding instructions for correct device functioning.



ESD: This symbol identifies a procedure that requires you take measures to prevent Electrostatic Discharge (ESD) e.g., use an ESD wrist strap. Circuit boards are most at risk. Please follow ESD procedures.

TECHNICAL SUPPORT

Support Through the Website

Datalogic provides several services as well as technical support through its website. Log on to (www.datalogic.com).

For quick access, from the home page click on the search icon, and type in the name of the product you're looking for. This allows you access to download Data Sheets, Manuals, Software & Utilities, and Drawings.

Hover over the Support & Service menu for access to Services and Technical Support.

Reseller Technical Support

An excellent source for technical assistance and information is an authorized Datalogic reseller. A reseller is acquainted with specific types of businesses, application software, and computer systems and can provide individualized assistance.

Warranty

Datalogic warrants that the Products shall be free from defects in materials and workmanship under normal and proper use during the Warranty Period. Products are sold on the basis of specifications applicable at the time of manufacture and Datalogic has no obligation to modify or update Products once sold. The Warranty Period shall be five years from the date of shipment by Datalogic, unless otherwise agreed in an applicable writing by Datalogic.

Datalogic will not be liable under the warranty if the Product has been exposed or subjected to any: (1) maintenance, repair, installation, handling, packaging, transportation, storage, operation or use that is improper or otherwise not in compliance with Datalogic's instruction; (2) Product alteration, modification or repair by anyone other than Datalogic or those specifically authorized by Datalogic; (3) accident, contamination, foreign object damage, abuse, neglect or negligence after shipment to Buyer; (4) damage caused by failure of a Datalogic-supplied product not under warranty or by any hardware or software not supplied by Datalogic; (5)any device on which the warranty void seal has been altered, tampered with, or is missing; (6) any defect or damage caused by natural or man-made disaster such as but not limited to fire, water damage, floods, other natural disasters, vandalism or abusive events that would cause internal and external component damage or destruction of the whole unit, consumable items; (7) use of counterfeit or replacement parts that are neither manufactured nor approved by Datalogic for use in Datalogic-manufactured Products; (8) any damage or malfunctioning caused by non-restoring action as for example firmware or software upgrades, software or hardware reconfigurations etc.; (9) loss of data; (10) any consumable or equivalent (e.g. cables, power supply, batteries, etc.); or (11) any device on which the serial number is missing or not recognizable.

THE DATALOGIC WARRANTIES ARE EXCLUSIVE AND IN LIEU OF ALL OTHER WARRANTIES, WHETHER WRITTEN, EXPRESS, IMPLIED, STATUTORY OR OTHERWISE, INCLUDING, BUT NOT LIMITED TO, THE IMPLIED WARRANTIES OF MERCHANTABILITY AND FITNESS FOR PARTICULAR PURPOSE. DATALOGIC SHALL NOT BE LIABLE FOR ANY DAMAGES SUSTAINED BY BUYER ARISING FROM DELAYS IN THE REPLACEMENT OR REPAIR OF PRODUCTS UNDER THE ABOVE. THE REMEDY SET FORTH IN THE WARRANTY STATEMENT IS THE BUYER'S SOLE AND EXCLUSIVE REMEDY FOR WARRANTY CLAIMS. NO EXTENSION OF THIS WARRANTY WILL BE BINDING UPON DATALOGIC UNLESS SET FORTH IN WRITING AND SIGNED BY DATALOGIC'S AUTHORIZED REPRESENTATIVE. DATALOGIC'S LIABILITY FOR DAMAGES ON ACCOUNT OF A CLAIMED DEFECT IN ANY PRODUCT DELIVERED BY DATALOGIC SHALL IN NO EVENT EXCEED THE PURCHASE PRICE OF THE PRODUCT ON WHICH THE CLAIM IS BASED. DATALOGIC SHALL NOT BE LIABLE FOR DAMAGES RELATING TO ANY INSTRUMENT, EQUIPMENT, OR APPARATUS WITH WHICH THE PRODUCT SOLD UNDER THIS AGREEMENT IS USED. Further details on warranty coverage, rights and conditions are addressed under and regulated by the Terms and Conditions of Sales of Datalogic available at https://www.datalogic.com/terms_conditions_sales.

CHAPTER 1
INTRODUCTION

ABOUT THE READER

The Gryphon 4600 series is a premium line of high-performance handheld scanners designed for advanced applications in Retail, Healthcare, Manufacturing and Transportation & Logistics.

The Gryphon 4600 scanners, designed with sustainability, usability, and advanced technology at their core, are the first in their category to incorporate an eco-design approach, featuring low power consumption, recycled materials, and eco-friendly packaging to help reduce carbon footprint.

USING THE GRYPHON™ I GD/GBT/GM 4600 READER

The Gryphon 4600 scanner delivers an unbeatable scanning experience thanks to the highly visible green central cross LED aimer for easier targeted scanning. Datalogic's 'Green Spot' technology and exclusive 3GL™ (3 Green Lights) provide superior good-read feedback. The dual-color LED illumination technology, featuring warm white and red light user-selectable, allows to adapt to any application need on the fly. Decoding The Gryphon 4600 scanner delivers snappy reading performance on all common 1D and 2D codes, including GS1 Digital Link and Digital Watermarking, as well as smaller, high density, high resolution condensed codes and it also excels at reading barcodes from mobile devices. A powerful combination of a high-speed dual-core processor, AI (Artificial Intelligence) algorithms, and advanced decoding enhancements delivers a significant increase in scanning speed. The data stream - acquired from decoding a symbol - is rapidly sent to the host. The reader is immediately available to read another symbol.

OMNI-DIRECTIONAL OPERATING

To read a symbol or capture an image, simply aim the reader and pull the trigger. The Gryphon™ I GD/GBT/GM4600 is a powerful omni-directional reader, so the orientation of the symbol is not important. Datalogic's exclusive patented 'Green Spot' for good-read feedback helps to improve productivity in noisy environments or in situations where silence is required. When positioning the product into the stand, the magnetic coupling will make the scanner automatically detect a bar code inside the field of view, and switch the reading system from trigger mode to auto-sense mode.

IMAGING

The Gryphon™ I GD/GBT/GM4600 reader can also function as a camera by capturing entire images or image portions of labels, signatures, and other items. See the Datalogic Aladdin configuration tool for information and options for this feature.

BATTERY SAFETY

To reinstall, charge and/or perform any other action on the battery, follow the instructions in this manual.



NOTE: Before installing the Battery, read "Battery Safety" on this and the following pages. Datalogic recommends replacing rechargeable battery packs after few years of use to ensure optimal performance.



WARNING: Do not discharge the battery using any device except for the reader. When the battery is used in devices other than the designated product, it may damage the battery or reduce its life expectancy. If the device causes an abnormal current to flow, it may cause the battery to become hot, explode or ignite and cause serious injury. Lithium-ion battery packs may get hot, explode or ignite and cause serious injury if exposed to abusive conditions. Be sure to follow the safety warnings listed below:

- **Do not place the battery pack in fire or heat.**
- **Do not connect the positive terminal and negative terminal of the battery pack to each other with any metal object (such as wire).**
- **Do not carry or store the battery pack together with metal objects.**
- **Do not pierce the battery pack with nails, strike it with a hammer, step on it or otherwise subject it to strong impacts or shocks.**
- **Do not solder directly onto the battery pack.**
- **Do not expose the battery pack to liquids, or allow the battery to get wet.**
- **Do not apply voltages to the battery pack contacts.**

In the event the battery pack leaks and the fluid gets into your eye, do not rub the eye. Rinse well with water and immediately seek medical care. If left untreated, the battery fluid could cause damage to the eye.

CAUTION: Always charge the battery at 32° – 104°F (0° - 40°C) temperature range.

Use only the authorized power supplies, battery pack, chargers, and docks supplied by your Datalogic reseller. The use of any other power supplies can damage the device and void your warranty.

Do not disassemble or modify the battery. The battery contains safety and protection devices, which, if damaged, may cause the battery to generate heat, explode or ignite.

Do not place the battery in or near fire, on stoves or other high temperature locations.

Do not place the battery in direct sunlight, or use or store the battery inside cars in hot weather. Doing so may cause the battery to generate heat, explode or ignite. Using the battery in this manner may also result in a loss of performance and a shortened life expectancy.

Do not place the battery in microwave ovens, high-pressure containers or on induction cookware.

Immediately discontinue use of the battery if, while using, charging or storing the battery, the battery emits an unusual smell, feels hot, changes color or shape, or appears abnormal in any other way.

Do not replace the battery pack when the device is turned on.

Do not remove or damage the battery pack's label.

Do not use the battery pack if it is damaged in any part.

Battery pack usage by children should be supervised.

CAUTION: Storage of batteries for long time at fully charged status or at fully discharged status should be avoided.

CAUTION: Only in case of long storage, to avoid deep discharge of the battery it is recommended to partially recharge the battery every three months to keep the charge status at a medium level.

As a reference, run a fast recharge for 20 minutes every three months on unused products to avoid any performance deterioration of the cell.

As with other types of batteries, Lithium-Ion (LI) batteries will lose capacity over time. Capacity deterioration is noticeable after one year of service whether the battery is in use or not. It is difficult to precisely predict the finite life of a LI battery, but cell manufacturers rate them at 500 charge cycles. In other words, the batteries should be expected to take 500 full discharge / charge cycles before needing replacement. This number is higher if partial discharging / recharging is adhered to rather than full / deep discharging.

The Li-Cap has a nominal guaranteed lifetime of 250.000 cycles.

The typical manufacturer advertised useful life of LI batteries is one to three years, depending on usage and number of charges, etc., after which they should be removed from service, especially in mission critical applications. Do not continue to use a battery that is showing excessive loss of capacity, it should be properly recycled / disposed of and replaced. For most applications, batteries should be replaced after one year of service to maintain customer satisfaction and minimize safety concerns.

Collect and recycle waste batteries separately from the device in compliance with European Directive 2006/66/EC, 2011/65/EU, 2002/96/EC and 2012/19/EU and subsequent modifications, US and China regulatory and others laws and regulations about the environment.

PROGRAMMING THE READER

Configuration Methods

Programming Bar Codes

The reader is factory-configured with a standard set of default features. After scanning the interface bar code, you can select other options and customize your reader through use of the instructions and programming bar code labels available in the corresponding features section for your interface. Customizable settings for many features are found in Configuration Parameters, starting on page 37.

Some programming labels, like “Restore Custom Defaults”, require only the scan of the single label to enact the change. Most, however, require the reader to be placed in Programming Mode prior to scanning them. Scan an ENTER/EXIT bar code once to enter Programming Mode. Once the reader is in Programming Mode, scan a number of parameter settings before scanning the ENTER/EXIT bar code a second time, which will then accept your changes, exit Programming Mode and return the reader to normal operation.



NOTE: There are some exceptions to the typical programming sequence described above. Please read the description and setting instructions carefully when configuring each programmable feature.

Datalogic Aladdin™

Datalogic Aladdin™ is a multi-platform utility program providing a quick and user-friendly configuration method via the RS-232/USB-COM interface. Aladdin allows you to program the reader by selecting configuration commands through a user-friendly graphical interface running on a PC. These commands are sent to the reader over the selected communication interface, or they can be printed as bar codes to be scanned. Aladdin also facilitates image capturing.

In addition, Aladdin makes it easy to upgrade the handheld’s firmware, to attain the benefits of new reader features. Reference the Datalogic Aladdin™ Online Help for more details.

Aladdin is available for download free of charge on the Datalogic website.

DL-Connect

Datalogic Connect is a comprehensive solution designed to simplify the development, deployment, and management of IoT applications. With support for a wide range of devices, robust communication protocols, and advanced analytics capabilities, the platform enables the full potential of the Internet of Things.

This documentation covers everything needed to get started with Datalogic Connect, including installation instructions, a platform overview, user guides, best practices, troubleshooting tips, and more. Whether for beginners or experienced IoT developers, it provides valuable information and resources to support successful implementation.

To get started, use the navigation menu on the left to explore the different sections of the documentation. New users should begin with the “Getting Started” section. For any questions or assistance, please contact the support team.

Click the link to access the Datalogic Connect website.

https://docs.connect.datalogic.com/

CHAPTER 2
SETUP

UNPACKING

Check carefully to ensure the reader and any cables or accessories ordered are present and undamaged. If any damage occurred during shipment, contact "Technical Support" on page xiv.

SETTING UP THE GRYPHON™ GD4600 READER

Depending on whether you are using a Corded or Wireless version of the Gryphon, follow the steps provided in this section to connect and get your reader up and communicating with its host:

1. Connect the Interface Cable to the reader as shown in Figure 1. To disconnect the cable, insert a paper clip or similar object into the opening shown.
2. Connect the other end to the Host (see the next section, "Connecting Host Interface" on page 6 and Figure 3).
3. Modify "Customizing Configuration Settings" on page 34 (only if modifications are needed from factory settings).



NOTE: According to Regulation for shipping Li-Ion based battery packs, the products and their spare battery packs parts are shipped with a very low residual charge (low state of charge).

Hence the needs:

that a new product must be fully recharged before starting to use it and

that battery packs of the stocked products GBT/GM46 and spare battery pack parts must be periodically recharged : for instance by using a WLC4690 base station powered up with a 12V Datalogic AC/DC adapter (cod. 8-0935) for at least 30 minutes each 3 months.

CONNECTING HOST INTERFACE

The reader kit you ordered to match your interface should provide a compatible cable for your installation. If this is not so, contact "Technical Support" on page xiv.

The reader can communicate using the interfaces illustrated below.

For corded versions, connect the reader cable by inserting the cable into the handle as shown in the following Figure.

To remove the interface cable from the reader:

1. Locate the green button on the back of the handle.
2. Hold the green button with the tip of a pencil/pen.
3. As you apply pressure on the button, pull out the cable.

When reinserting the cable, make sure the connector clip is on the same side as the reader release hole. Insert the cable, it should click when it is fully inserted.

Figure 1. Cable Connection/Disconnection to the Reader

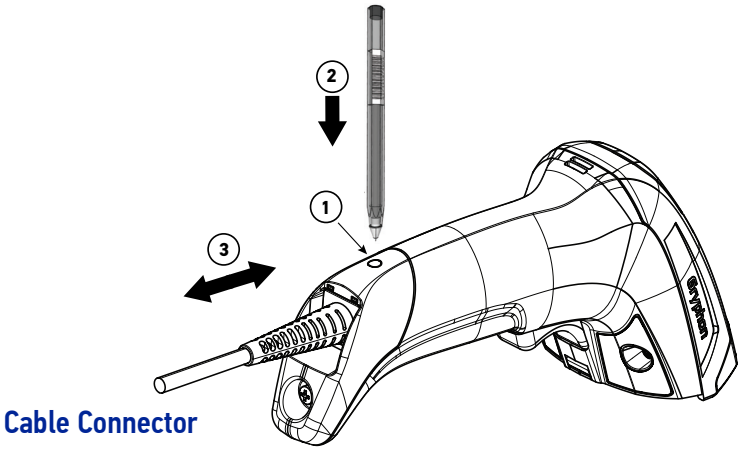

RS-232 Serial Connection

Turn off power to the terminal/PC and connect the reader to the terminal/PC serial port via the RS-232 cable as shown below. If the terminal will not support POT (Power Off the Terminal) to supply reader power, use the approved power supply (AC Adapter). Plug the AC Adapter barrel connector into the socket on the RS-232 cable connector and the AC Adapter plug into a standard power outlet.

RS-232: The reader can communicate with a standard or Wincor-Nixdorf (W-N) RS-232 host.

RS-232 OPOS: This interface is used for OPOS/UPOS/JavaPOS systems.

Figure 2 - Connection to the Host

RS-232



NOTE: Only Multi-Interface GD4690

USB Connection

Connect the reader to a USB port on the terminal/PC using the correct USB cable for the interface type you ordered.

USB: Select to communicate either by USB OEM, USB COM STD, or USB Keyboard interface types by scanning the appropriate interface type bar codes available in this manual. The default interface is USB-COMPOSITE, or RS-232-STD.

Figure 3 - Connection to the Host

USB



NOTE: Specific cables are required for connection to different hosts. The connections illustrated in Figure 3 are examples only. Actual connectors may vary from those illustrated, but the steps to connect the reader remain the same.

NOTE: Only Multi-Interface GD4690

SETTING UP THE GRYPHON™ GM/GBT4600 READER

Follow the steps below to connect and get your reader up and communicating with its host.

1. Connecting to the Base Station starting on page 17
2. Link to the Base Station on page 27
3. Select the Interface Type on page 30.

NOTE: According to recent modification of Regulation for shipping Li-Ion based battery packs, the products and their spare battery packs parts are shipped with a very low residual charge (low state of charge).

Hence the needs

*** that a new product must be fully recharged before starting to use it.**

and

*** that battery packs of the stocked products GBT/GM46 and spare battery pack parts must be periodically recharged: for instance by using a WLC4690 base station powered up with a 12V Datalogic AC/DC adapter (cod.8-0935) for at least 30 minutes each 3 months..**

POSITIONING THE BASE STATION

The base station may be set up in desk application to hold the reader in three different positions, either a horizontal or standing or vertical position, in order to provide the most comfortable use depending on the needs.

Base Station Positions and Related Clips to be Used

Figure 4 - Horizontal Position



The base station may be set up in desk application to hold the reader in three different positions, either a horizontal or standing or vertical position, in order to provide the most comfortable use depending on the needs.

Figure 5 - Presentation Position

This position is preferred if the reader is to be used in stand mode and not needed to be often removed from base station.

PA-WLC4690-BK/HC optional accessory is needed to support this feature, for further information check Appendix F, Accessories.



Figure 6 - Vertical Position



This position is preferred when lack of room on the desktop recommends the reader to be left vertical during recharging.

Insert the appropriate parts for the desired base station position.

CC-WLC4690-BK/HC optional accessory is needed to support this feature, for further information check Appendix F, Accessories.

How to secure the base station

It is possible to secure the cradle, to either a vertical or horizontal surface, with a fixing bush:

1. Position the fixing bush on the desired surface.

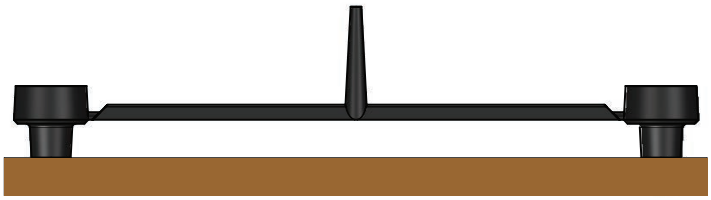

2. Insert and tighten the screws into their respective holes until fully secured.

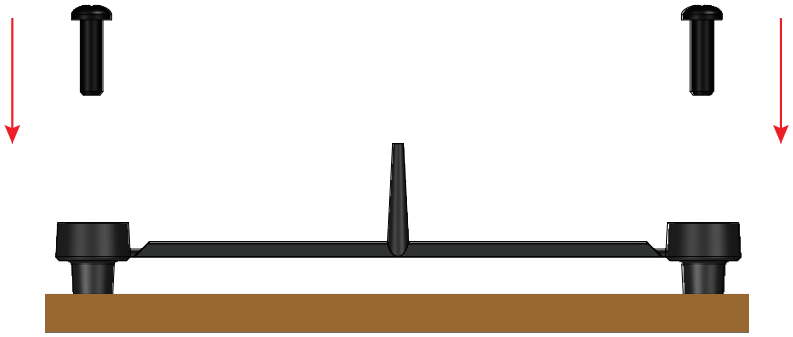

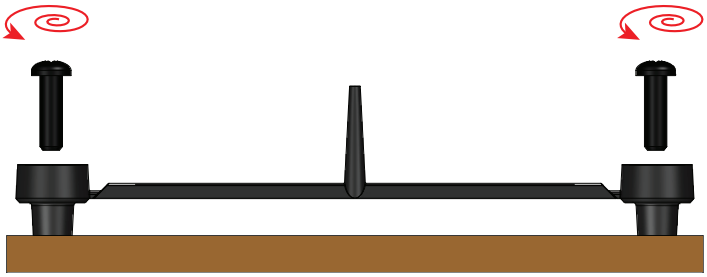

3. Once the screws are into place, detach the connecting plastic parts.

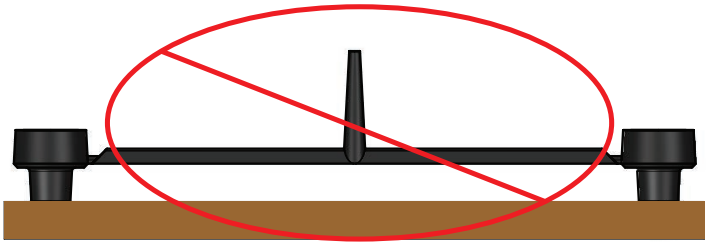



4. Insert the cradle into the two fixing bushes.

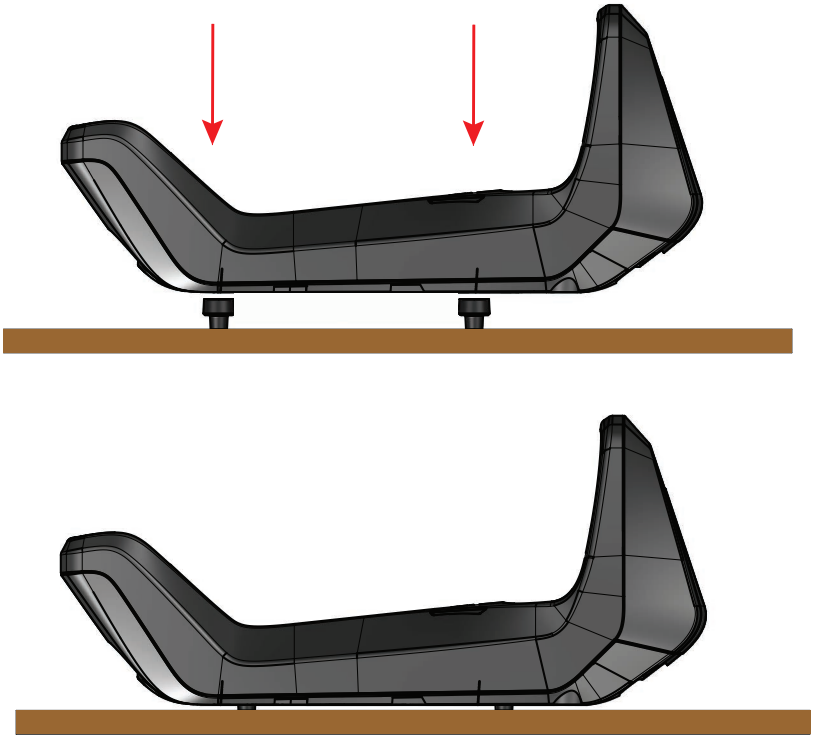

5. Slide the cradle to properly lock it into the screws

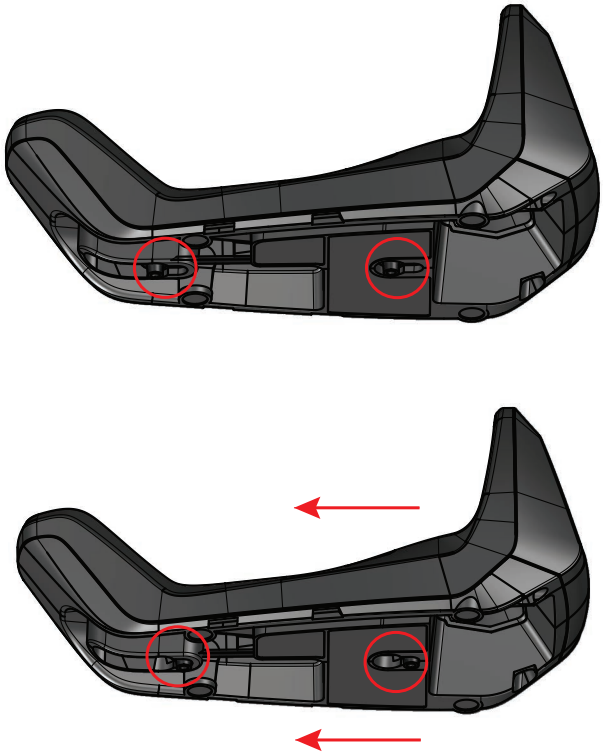

K30 Nut Installation on Cradle

The two K30 nuts allow the cradle to be mounted to a flat surface approximately 2 mm thick using two holes with a distance of 81.5 mm center-to-center.

Follow the instructions below to ensure proper installation and stable fastening of the bracket.

1. Place the K30 Nuts into the corresponding slots:

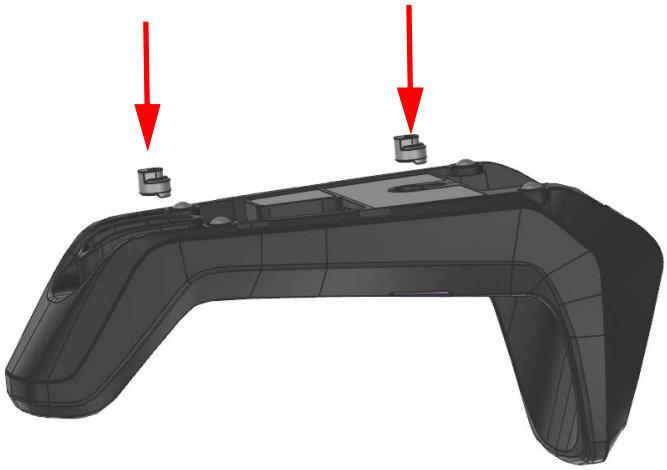

2. Slide the K30 nuts into their seats:

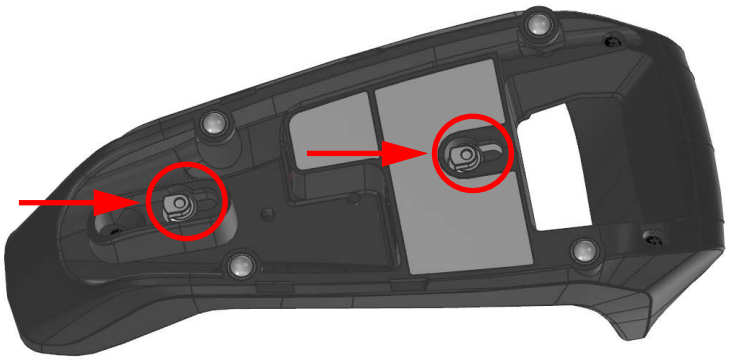

3. Make sure they click into place:

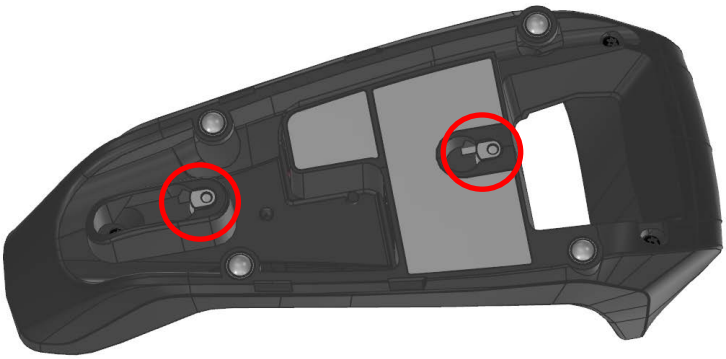

Instructions for Wall or Desk Magnet Configuration change

The base station features an integrated desk/wall selector that allows users to choose between standard retention (desk) or increased retention (wall). It's easy to use and provides stronger scanner hold in wall mode, making it ideal for applications like medical carts, self-checkout systems, and wall-mounted setups.

Desk Configuration





NOTE: The desk configuration is the default option.

Wall Configuration





To position the cradle for the Wall Configuration follow the steps below:

1. Remove the Magnet Group by leveraging with a flat end screwdriver.



2. Rotate the Magnet Group by bringing the “W” symbol upward.



3. Insert again the Magnet Group in the slot on the cradle.



NOTE: If you want to restore the desk position, follow the procedure in the reverse order.

READER, BASE STATION AND LEDS DESCRIPTION

LEDs on the gun provide information about the battery charging status as well as data transmission.

Figure 7 - Gryphon 4600 Gun LEDs

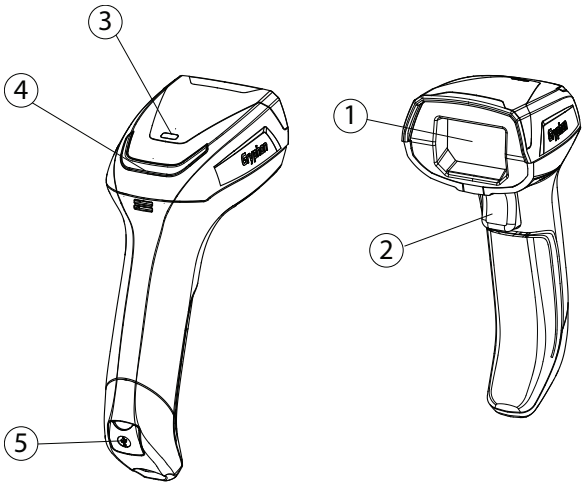

1. Scan Window
2. Trigger
3. Battery & Recharge LED
4. Good Read LED
5. Communication Port

NOTE: The recharge LED is only active when charging via a USB cable directly connected to the gun; it is not active when charging on the cradle.

Figure 8 - WLC4690 Base Station LEDs

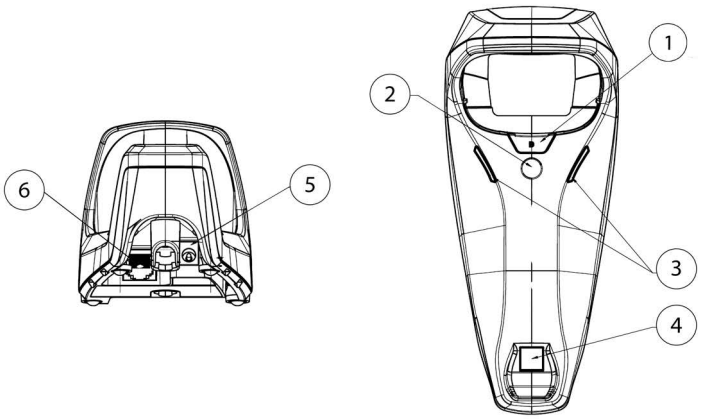

1. Desk/Wall Selector
2. Service Button
3. Power and Charger LED
4. Radio-Link Label
5. Aux Power Port
6. Communication Port

NOTE: See Wall Configuration, starting on page 14 **for details on the Desk/ Wall Selector instructions.**

NOTE: The base charging station, if wall mounted, must be installed at a maximum height of 2 m.

CONNECTING THE BASE STATION

The following figure shows how to connect the base station to a terminal, PC or other host device. Turn off the host before connection and consult the manual for that equipment (if necessary) before proceeding. Connect the interface cable before applying power to the Base Station.

NOTE: The Gryphon GBT/GM4600 can also be Powered by the Terminal. When powered by the Terminal, the battery charger is automatically set to Slow charge.

For some specific interfaces or hosts or lengths of cable, the use of an external power supply is recommended for full recharging capability (see GD4600 Technical Specifications, starting on page 306 **for more details).**

Base Station Connection and Routing

1. First insert the Interface (I/F) Cable connector into the port in the underside of the Base Station.

2. Insert the Power Cable into the Base Station, connect it to the AC Adapter, then plug the AC power cord into the wall outlet.

Figure 9 - Connecting the Base Station

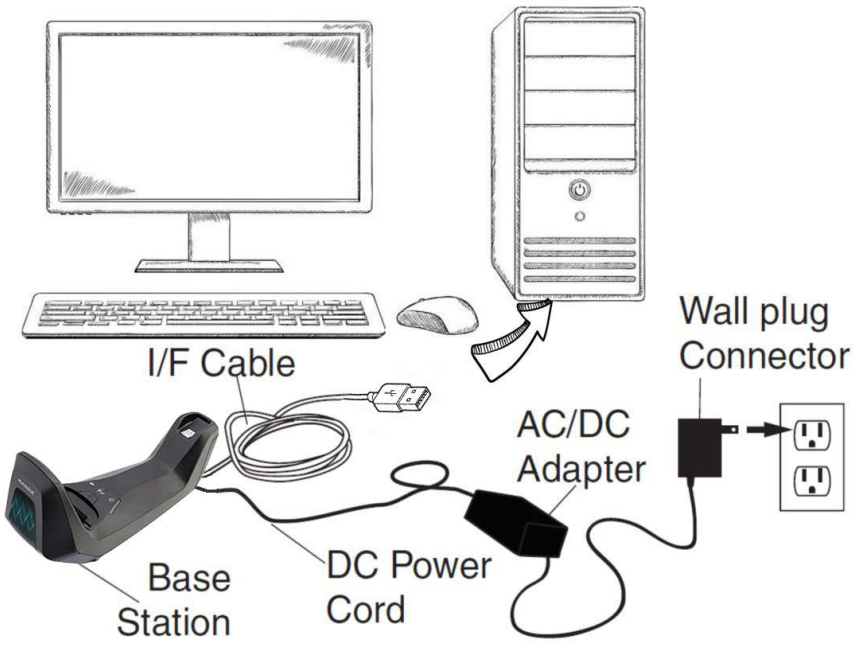

Securing the DC Power Cord (Optional)

The DC power cord for the adapter can be secured to the bottom of the base in order to maximize the mechanical retention of the cable itself. The routing of the cable can be changed to accommodate base station positioning: horizontal or vertical mount. The cable can be looped around to the front of the base station, or fed directly out the back of the base station, as shown in the figure below.

Figure 10 - Options for routing the DC cord to the front



or fed directly out the back of the Base Station, as shown below:

Figure 11 - Options for routing the DC cord to the bottom



Host Connection

Verify before connection that the reader's cable type is compatible with your host equipment. Most connections plug directly into the host device as shown in Figure 13.

NOTE: First connect the data cable (USB or RS-232), then connect the power cable (optional for the USB and mandatory for the RS-232).

NOTE: The power cable is optional for the USB and mandatory for the RS-232.

Figure 12 - Connecting to the Host USB



Figure 13 - Connecting to the Host RS-232



Power Connection

1. First plug the cable into the interface port.
2. Then plug the AC Adapter into an approved AC wall socket with the cable facing downwards to prevent undue strain on the socket.

SYSTEM AND NETWORK LAYOUTS

Stand Alone Layouts

Figure 14 - Single Reader Layout

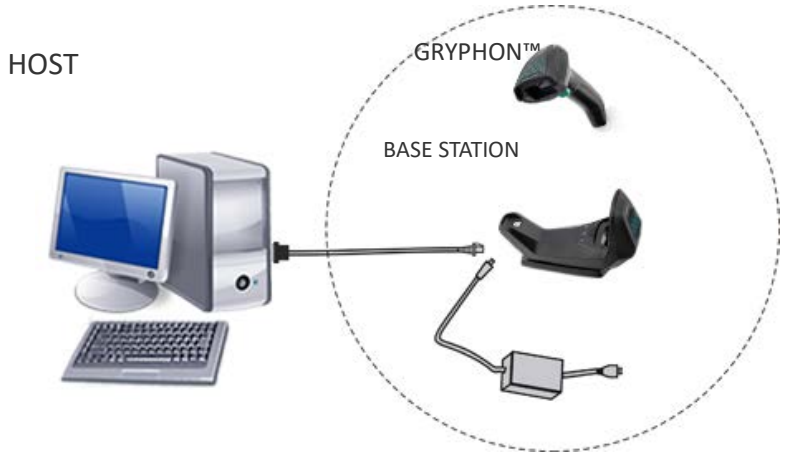

Figure 15 - Multiple Reader Layout

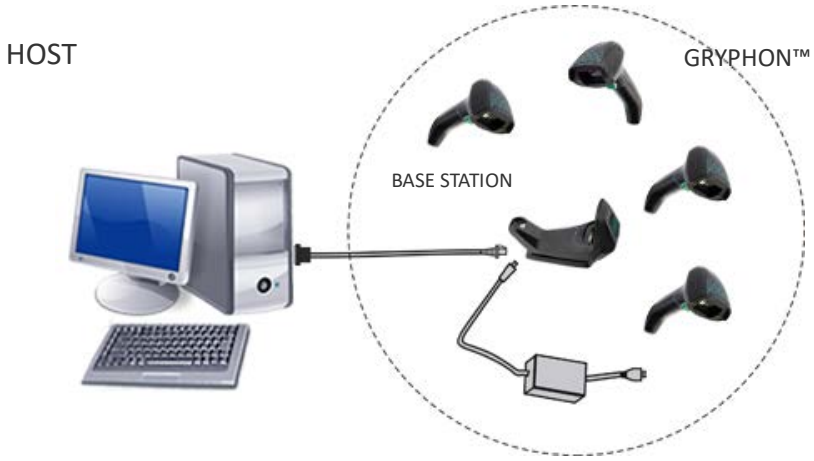

In stand alone systems, each base station is connected to a single Host.

Figure 16 - Multiple Stand Alone Layouts

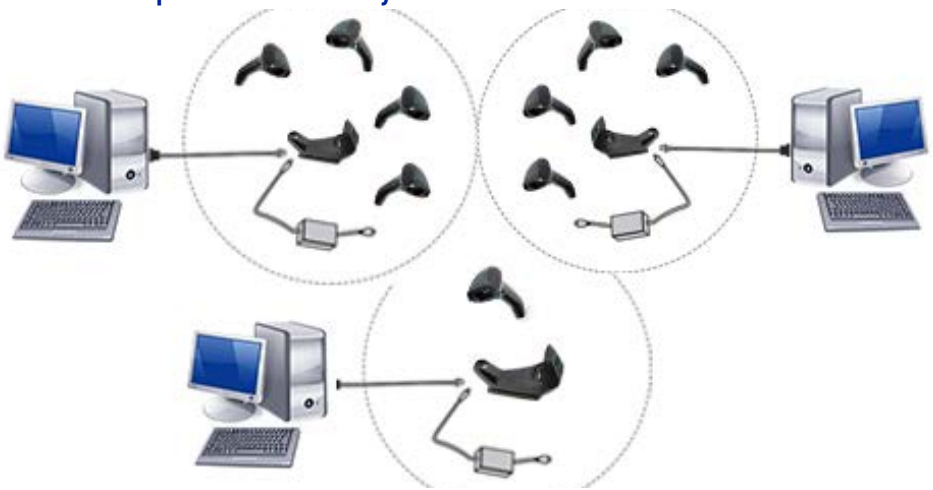

Many stand alone connections can operate in the same physical area without interference, provided all readers and base stations in the system have different addresses.

USING THE GBT/GM4600 READER

Reader LEDs

Specific LEDs on the Gryphon reader provide information about: good reading result (3GL), battery status. The Battery Status information can be easily retrieved by double-tapping with your fingers on top of the head of the reader. The following table explains the main color combinations provided by the Battery Status LED.

Table 1 - Battery LED

COLOR		BATTERY STATUS
Cradle blinking color (1s ON - 1s OFF)	Green (charge = 50% - 99%) Amber (charge = 2% - 49%)	Charge in Progress
Cradle blinking color (100ms ON - 1900ms OFF)	Amber (charge less than 1%) NOTE: scanner unusable	Charge in Progress
Cradle solid Green (charge = 100%)	It goes **OFF** when Scanner is unplugged	Charge Complete
Gun double tap behaviour solid color (3s time-out)	Green (charge = 50% - 100%) Amber (charge = 2% - 50%) Red blinking (it activates automatically below the 2%)	Battery Status
Gun Red Blinking	(1s ON 9s OFF)	Battery Status

USING THE WLC4690 RADIO BASE

Radio Base LEDs

LEDs on the Gryphon Base provide information about the Base as well as battery charging status, as shown in the figure below.

Figure 17 - Gryphon Base LEDs



Table 2 - Radio Base LEDs

LED	STATUS
1 Power on / Data	Green On = Base is powered Green Blinking = Base receives data and commands from the Host or the Reader.
2 Charging	Green ON = the battery is completely charged Green fading = battery level 50 to 99% Amber fading = battery level 0 to 49%

The capacitive touch button can be used to force device connection via the Datalogic Aladdin Software tool and for paging the reader when it is activated. See also User Indications for WLC4690 Base Stations, starting on page 316.

REPLACING THE BATTERY PACK

NOTE: Before proceeding, read "Battery Safety" on page 2**. To ensure maximum performance, Datalogic recommends the replacement of the rechargeable battery pack if you note either of the following conditions:**

- **battery life drops below approximately 80% of the original life;**
- **battery charging time increases significantly.**

Use the following procedure to change the reader's battery:

1. With a narrow metallic object (i.e. a coin) or a screwdriver, unscrew the battery cover screw.



2. Extract the battery pack from its slot.



3. Insert the new battery in the same position.



4. Replace the battery holder cap, plug in the connector and return the contacts circuit to its previous location.

NOTE: After first battery insertion or after long time of scanner inactivity it could be necessary a recharge cycle to re-activate the scanner.

NOTE: When inserting the new battery into the handle, take care to position the battery and the connector as illustrated above.

5. Insert the cover in the handle and screw it into place.



6. If the gun doesn't turn on, place it on the cradle.

USING THE GRYPHON™ I GD/GBT/GM4600

The Gryphon™ I 4600 Family normally functions by capturing and decoding codes. The aiming system is activated on trigger pull and indicates the center of the field of view which should be positioned over the bar code:

Aiming System

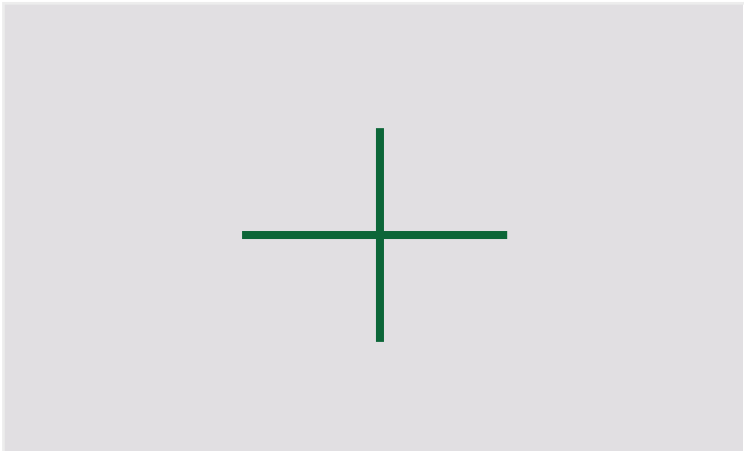

Relative Size and Location of Aiming System Pattern

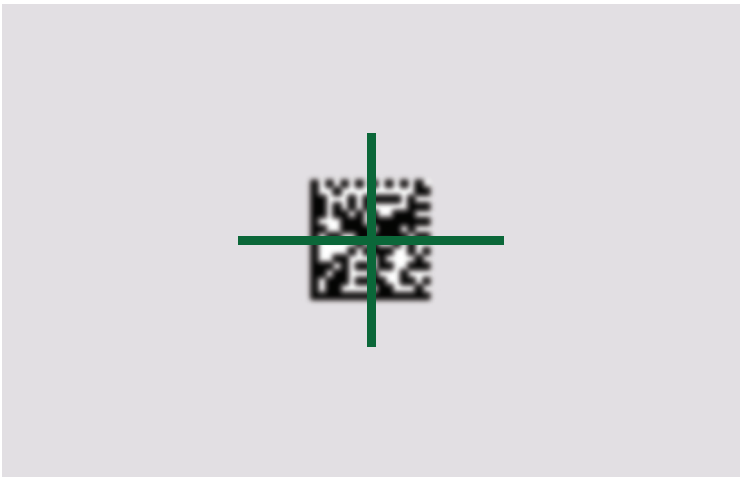

2D Code Sample

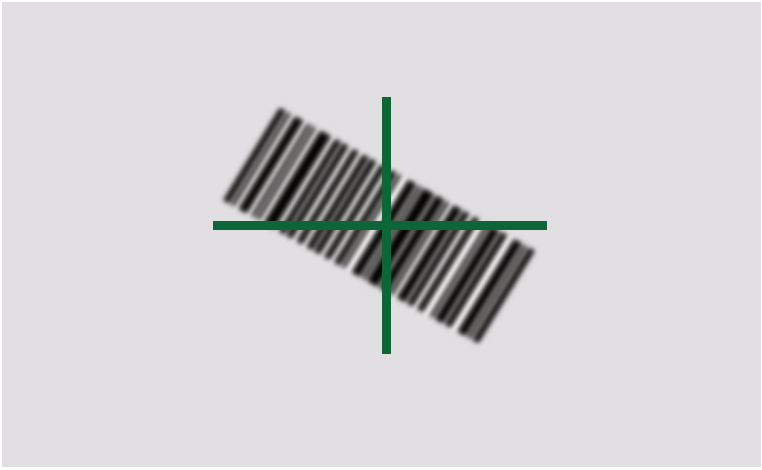

1D Linear Barcode Sample

Symbologies with smaller bars or elements (mil size) should be read closer to the unit. Symbologies with larger bars or elements (mil size) can be read farther from the unit. If the aiming system is centered and the entire bar code is centered on the cross, you will get a good read. Successful reading is signaled by an audible tone plus a good-read green spot feedback projected on the code read.

Relative Size and Location of Green Spot

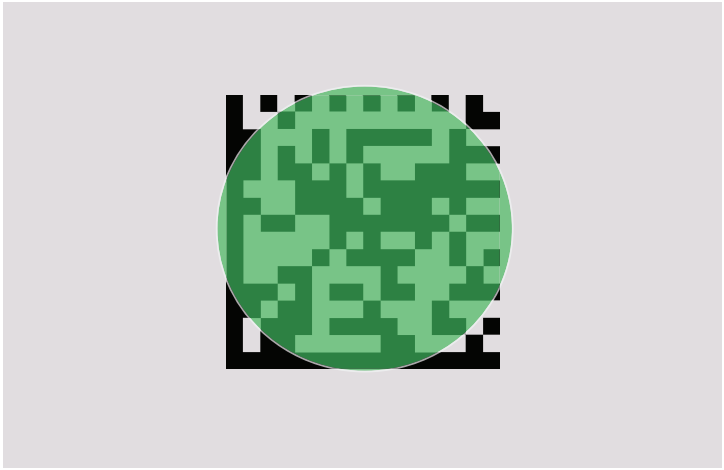

LINKING THE READER

Link Datalogic Devices to Base

Before configuring the interface it is necessary to link the handheld with the base.

To link the handheld and the base simply put it into the base or read the direct link below.

If the reader was previously linked to another base, you must first scan the Unlink bar code before re-linking to the new base.



Unlink

Link Reader as Serial Device to a Bluetooth Host

Use this procedure to let the reader communicate with a Bluetooth host using the Bluetooth Serial Port Profile (SPP).

1. If using a Bluetooth adapter on the host device, install any driver provided with the adapter.
2. Scan the Link to Host in SPP mode label below to make the reader visible to the host device.
3. Use the Bluetooth manager of the host device to “Discover new devices” and select "GBT4600...". If you receive an error message, it may be necessary to change the security settings on either the host device or the reader.
4. Use an RS-232 terminal program to see incoming data on the port designated by the Bluetooth manager of the host device.



Link to Host in SPP Mode

Link Reader as HID device to a Bluetooth host

Use this procedure to send data to a Bluetooth host using the Bluetooth HID profile.

1. If using a Bluetooth adapter on the host device, install any driver provided with the adapter.
2. Scan the Link to Host in HID mode label below to make the reader visible to the host device.
3. Use the Bluetooth manager of the host device to "Discover new devices" and select "GBT4600 …". If you receive an error message, it may be necessary to change the security settings on either the host device or the reader.
4. On the host device, open the program that is meant to receive the incoming data.

The data transmitted by the reader will appear in the program as if it was typed using the keyboard of the host device.



Link to Host in HID mode



NOTE: The Gryphon I GBT4600 can be set up to authenticate the remote system when connecting, by entering a Bluetooth passkey or a PIN code. If you want to set the security level and authentication options suitable for your application, or when adding new equipment to a system that requires authentication or uses a custom security PIN, please see the "Bluetooth Security Level" on page 266**.**

BLUETOOTH PASSKEY OR PIN CODE ENTRY REQUEST

During the pairing process, based on Host and Reader security settings, you may need to enter a Bluetooth passkey or PIN code.

When requested by the Host, simply enter the displayed code by scanning the corresponding bar codes for alphanumeric entry listed in Appendix D. Complete by scanning the End label. To restart the entering of the passkey, read the Restart label.



Passkey END



Passkey Restart

POWER OFF

Scan the bar code below to shut off power to the handheld until the next trigger pull.



Power Off



NOTE: After long time of scanner inactivity it could be necessary a recharge cycle to re-activate the scanner.

INTERFACE SELECTION

Upon completing the physical connection between the reader and its host, proceed directly to "Configuring the Interface" on page 31 for information and programming for the interface type the reader is connected to (for example: RS-232, USB, etc.) and scan the appropriate bar code in that section to select your system's correct interfac5e type.

The reader, depending upon the model, will support one of the following sets of host interfaces:

- USB Composite (Keyboard + COM)
- USB HID POS
- USB Toshiba TEC
- USB (Keyboard, COM, OEM)
- USB for Magellan Scanners
- RS-232 STD[1]
- RS-232 WN

1. GD4690 models only (USB and RS-232 Multi-interface)

CONFIGURING THE INTERFACE

Scan the programming bar code from the following section which selects the appropriate interface type to match the system the reader will be connected to. Next, proceed to the corresponding chapter in this manual (also listed in the table) to configure any desired settings and features associated with that interface.

NOTE: Some interfaces require the reader to start in the disabled state when powered up. If additional reader configuration is desired while in this state, pull the trigger and hold for 5 seconds. The reader will change to a state that allows programming with bar codes.

Table 3 - Available Interfaces

USB-COM[a]	
Select USB-COM-STD	USB-COM (simulates RS-232 standard interface)
USB-Composite (combines USB-KBD emulation and USB-COM	Select USB-Composite

a. USB-COM driver needs to be installed for these interfaces to work. Please download it from www.datalogic.com

KEYBOARD	
USB Keyboard with standard key encoding	Select USB Standard Keyboard
Select USB Alternative Keyboard	USB Keyboard with alternative key encoding

USB-OEM	
Select USB-OEM	USB-OEM (can be used for OPOS/UPOS/JavaPOS)

NOTE: If you erroneously read the USB-OEM interface selection code, it is required to press and hold the trigger to unlock the reader. Then read the correct interface bar code. This will work only at power-up. Please reconnect the reader if the unlock is not successful.

OTHER INTERFACES	
USB HID POS	Select USB HID POS
Select USB Toshiba TEC	USB Toshiba TEC
Datalogic Magellan Scanners' specific interface, USB AUX	Select Datalogic Magellan Scanners' USB AUX
Magellan RS232 AUX port	Datalogic Magellan RS232 AUX port

RS-232[a]	
RS-232 standard interface **Not supported on USB only models*	Select RS232-STD
Select RS232-WN	RS-232 Wincor-Nixdorf
RS-232 for use with OPOS/UPOS/JavaPOS	Select RS-232 OPOS

a. GD4690 models only (USB and RS-232 Multi-interface)

CUSTOMIZING CONFIGURATION SETTINGS

Using the Programming Bar Codes

This manual contains feature descriptions and bar codes which allow you to reconfigure your reader. Some programming bar code labels, like Resetting the Product Configuration to Defaults, starting on page 37, require only the scan of that single label to enact the change.

Most of the programming labels in this manual, however, require the reader to be placed in Programming Mode prior to scanning them. Scan an ENTER/EXIT bar code once to enter Programming Mode. Once the reader is in Programming Mode, you can scan a number of parameter settings before scanning the ENTER/EXIT bar code a second time, which will then accept your changes, exit Programming Mode and return the reader to normal operation.



NOTE: There are some exceptions to the typical programming sequence described above. Please read the description and setting instructions carefully when configuring each given programmable feature.

Datalogic Aladdin™ Utility

Programming can alternatively be performed using the Datalogic Aladdin™ Configuration application which is available for free download from the Datalogic website listed on the back cover of this manual. This multi-platform utility program allows device configuration using a PC. It communicates to the device using a serial or USB cable and can also create configuration bar codes to print.

Datalogic Aladdin™ is a multi-platform utility program providing a quick and user-friendly configuration method via the RS-232/USB-COM interface. The Aladdin utility is available on the Datalogic website. Aladdin allows you to program the reader by selecting configuration commands through a user-friendly graphical interface running on a PC. These commands are sent to the reader over the selected communication interface, or they can be printed as bar codes to be scanned.

Aladdin also provides the ability to perform a software upgrade for the connected device (see the Datalogic Aladdin™ Help On-Line for more details).

Interface Settings

The reader is typically factory-configured with a set of default features standard to the interface type you ordered. See Appendix B, Standard Defaults.

Global Interface Features, starting on page 39 provides settings configurable by all interface types. If your installation requires you to further customize your reader, you can select other options through use of the instructions and programming bar codes available in the appropriate section for your interface

	CRADLE	GUN USB	GUN M/I
USB (Keyboard, COM, OEM)	x	x	x
USB Composite (Keyboard + COM)	x	x	x
USB HID POS	x	x	x
USB Toshiba TEC	x	x	x
USB Aux Datalogic Magellan specific Interface	x	x	x
RS-232 STD	x		x
RS-232 WN	x		x
RS-232 OPOS	x		x
RS-232 Datalogic Magellan Scanners' specific interface	x		x

Configuring Other Features

If your installation requires different programming than the standard factory default settings, the following sections of this manual allow configuration of non-interface-specific settings you might require:

Configuration Using Bar Codes: General Features includes programming for scanning, beeper and LED indicators and other such universal settings.

Reading Parameters: Reading Parameters include programming for scanning, beeper and LED indicators and other universal settings.

1D Symbologies: Includes options concerning the bar code label types (symbologies). These settings allow you to enable/disable symbologies, set label lengths, require check digit, etc.

Software Version Transmission

The software version of the device can be transmitted over the RS-232, Keyboard and USB interfaces by scanning the following label.



Transmit Software Version

Resetting the Product Configuration to Defaults

Restore Custom Default Configuration

If you aren't sure what programming options are in your reader, or you've changed some options and want to restore the Custom Default Configuration that may have been saved in the reader, scan the Restore Custom Default Configuration bar code below. This will restore the custom configuration for the currently active interface.

NOTE: Custom defaults are based on the interface type. Configure the reader for the correct interface before scanning this label.

Restore Custom Default Configuration

CAUTION: The Restore Custom Default Configuration label resets only the interface that is active at the time of reading.

Restore Factory Configuration

If you want to restore the Factory Configuration for your reader, scan either the Restore USA Factory Configuration bar code or the Restore EU Factory Configuration bar code below. Both labels restore the reader configuration to the factory settings, including the interface type. The USA label restores Label IDs to those historically used in the USA. The EU label restores Label IDs to those historically used in Europe. The Label ID sets for USA and EU are shown in the “Label ID” Section on page 88 of this manual.



Restore USA Factory Configuration



Restore EU Factory Configuration

The programming items listed in the following sections show the factory default settings for each of the menu commands.



CAUTION: The Restore USA Factory Configuration and the Restore EU Factory Configuration labels reset all interfaces to their default settings when read.

CHAPTER 3
CONFIGURATION WITH BAR CODES

This and following sections provide programming bar codes to configure your reader by changing the default settings. For details about additional methods of programming, see "Customizing Configuration Settings" on page 34.

NOTE: You must first enable your device to read bar codes in order to use this section. If you have not done this, go to Setup, starting on page 5 **and complete the appropriate procedure.**

CONFIGURATION PARAMETERS

Once the reader is set up, you can change the default parameters to meet your application needs. Refer to Standard Defaults, starting on page 322 for initial configuration in order to set the default values and select the interface for your application.

NOTE: In the following sections, text shown with a green star indicates a factory default value.

★This is an example of a default value.

The following configuration parameters are divided into logical groups, making it easy to find the desired function based on its reference group.

Interface Configuration:

- RS-232 Standard Settings, starting on page 41
- RS-232/USB-COM Settings, starting on page 46
- Keyboard Interface, starting on page 53
- USB-OEM Interface, starting on page 81

Parameters common to all interface applications:

- Global Prefix/Suffix, starting on page 84
- Data Format, starting on page 83 gives options to control the messages sent to the Host system by selecting parameters to control the message strings sent to the handheld.
- Reading Parameters, starting on page 94 controls various operating modes and indicators status functioning.

Symbology-specific parameters:

1D Symbologies, starting on page 121 and 2D Symbologies, starting on page 211 define options for all symbologies and provides the programming bar codes necessary for configuring these features.



NOTE: You must first enable your reader to read bar codes in order to use this section. If you have not done this, go to Setup, starting on page 5 **and complete the appropriate procedure.**

To program features:

1. Scan the ENTER/EXIT PROGRAMMING bar code, available at the top of each programming page, when applicable.
2. Scan the bar code to set the desired programming feature. You may need to cover unused bar codes on the page, and possibly the facing page, to ensure that the reader reads only the bar code you intend to scan.
3. If additional input parameters are needed, go to Appendix D, and scan the appropriate characters from the keypad.



NOTE: Additional information about many features can be found in the References, starting on page 277**.**

If you make a mistake before the last character, scan the CANCEL bar code to abort and not save the entry string. You can then start again at the beginning.

4. Complete the programming sequence by scanning the ENTER/EXIT PROGRAMMING bar code to exit Programming Mode.

For more detailed descriptions, programming information and examples for setting selected configuration items, see References, starting on page 277.

GLOBAL INTERFACE FEATURES

The following interface features are configurable by all interface types.

To set features specific to your interface, turn to that section of this manual.

Host Commands — Obey/Ignore

This option specifies whether the reader will obey or ignore host commands. When set to ignore, the reader will ignore all host commands except those necessary for:

- service mode
- flash programming mode
- keeping the interface active
- transmission of labels.



★Host Commands = Obey
(Do Not Ignore Host Commands)



Host Commands = Ignore

USB Suspend Mode

This setting enables/disables the ability of USB interfaces to enter suspend mode.



USB Suspend Mode = Disable



★USB Suspend Mode = Enable

CONFIGURATION | RS-232 INTERFACE

Use the programming bar codes in this chapter if modifications to the standard RS-232 interface settings are necessary to meet your system's requirements. Additional settings which apply to both the RS-232 and USB interfaces are available in RS-232/USB-COM Settings, starting on page 46.

SECTION CONTENTS

RS-232 STANDARD SETTINGS starting on page 41

- Baud Rate
- Data Bits
- Stop Bits
- Parity
- Handshaking Control

Standard Factory Settings

Reference Appendix B, for a listing of standard factory settings.

RS-232 STANDARD SETTINGS

Baud Rate

Baud rate is the number of bits of data transmitted per second. Set the reader's baud rate to match the baud rate setting of the host device. With an improper baud rate setting, data may not reach the host correctly.



Baud Rate = 1200



Baud Rate = 2400



Baud Rate = 4800



★Baud Rate = 9600



Baud Rate = 19,200



Baud Rate = 38,400



Baud Rate = 57,600



Baud Rate = 115,200

Data Bits

This parameter allows the reader to interface with devices requiring a 7-bit or 8-bit ASCII protocol for sending and receiving data.

7 Data Bits

★8 Data Bits

NOTE: Handheld and base station models support the 8-bit ASCII protocol. The 7-bit ASCII protocol support is subject to specific firmware release. If the setting is not supported, the reader will emit three short beeps upon scanning the label.

Stop Bits

The stop bit(s) at the end of each transmitted character marks the end of transmission of one character and prepares the receiving device for the next character in the serial data stream. The number of stop bits selected (one or two) depends on the number the receiving terminal is programmed to accommodate. Set the number of stop bits to match host device requirements..

★1 Stop Bit

2 Stop Bits

Parity

This feature specifies parity required for sending and receiving data. A parity check bit is the most significant bit of each ASCII coded character. Select the parity type according to host device requirements.

- Select None when no parity bit is required.
- Select Odd parity and the parity bit value is set to 0 or 1, based on data, to ensure that an odd number of 1 bits are contained in the coded character.
- Select Even parity and the parity bit value is set to 0 or 1, based on data, to ensure that an even number of 1 bits are contained in the coded character..



★Parity = None



Parity = Even



Parity = Odd

Handshaking Control

The data interface consists of an RS-232 port designed to operate either with or without the hardware handshaking lines, Request to Send (RTS), and Clear to Send (CTS). Handshaking Control includes the following options:

- RTS — RTS is asserted during transmissions. CTS is ignored.
- RTS/CTS — RTS is asserted during transmissions. CTS gates transmissions.
- RTS/XON/XOFF — RTS is asserted during transmissions. CTS is ignored. XON and XOFF gate transmissions.
- RTS On/CTS — RTS is always asserted. CTS gates transmissions.
- RTS/CTS Scan Control — RTS is asserted during transmissions. CTS gates transmissions and controls enable and disable state of reader.



★Handshaking Control = RTS



Handshaking Control = RTS/CTS



Handshaking Control = RTS/XON/XOFF



Handshaking Control = RTS On/CTS



Handshaking Control = RTS/CTS Scan Control



Handshaking Control = RTS Off

CONFIGURATION | RS-232/USB-COM INTERFACES

SECTION CONTENTS

- Intercharacter Delay
- Beep On ASCII BEL
- Beep On Not on File
- ACK NAK Options
- ACK Character
- NAK Character
- ACK NAK Timeout Value
- ACK NAK Retry Count
- ACK NAK Error Handling
- Indicate Transmission Failure
- Disable Character
- Enable Character

Standard Factory Settings

Reference Appendix B, for a listing of standard factory settings.

RS-232/USB-COM SETTINGS

Intercharacter Delay

This parameter specifies the intercharacter delay between the end of one character and the beginning of the next. The delay can be set within a range of zero (0) to 990 milliseconds in 10ms increments. A setting of zero specifies no delay. See "Intercharacter Delay" on page 279 for more detailed programming instructions.



Intercharacter Delay = No Delay



Select Intercharacter Delay Setting

To configure this feature, scan the ENTER/EXIT bar code above, then the bar code at left followed by digits from the Alphanumeric characters in Appendix D representing your desired character(s). End by scanning the ENTER/EXIT bar code again.

Make a mistake? Scan the CANCEL bar code to abort and not save the entry string. You can then start again at the beginning.



CANCEL

★00 = No Intercharacter Delay

Beep On ASCII BEL

When this parameter is enabled, the reader issues a beep when a <BEL> character is detected on the RS-232 serial line. <BEL> is issued to gain a user's attention to an illegal entry or other important event.



★Beep On ASCII BEL = Disable



Beep On ASCII BEL = Enable

Beep On Not on File

This option enables/disables the action of the reader to sound a three beep sequence upon receiving a Not-On-File (NOF) host command.



Beep On Not On File = Disable



★Beep On Not On File = Enable

ACK NAK Options

This enables/disables the ability of the reader to support the RS-232 ACK/NAK protocol. When configured, the reader and/or host sends an “ACK” when it receives data properly, and sends “NAK” when the data is in error.

Options are:

- Disable
- Enable for label transmission — The reader expects an ACK/NAK response from the host when a label is sent.
- Enable for host-command acknowledge — The reader will respond with ACK/NAK when the host sends a command.
- Enable for label transmission and host-command acknowledge



★ACK/NAK Protocol = Disable ACK/NAK



ACK/NAK Protocol = Enable for label transmission



ACK/NAK Protocol = Enable for host-command acknowledge



ACK/NAK Protocol = Enable for label transmission and host command acknowledge

ACK Character

This setting specifies an ASCII character or hex value to be used as the ACK character. ASCII characters or any hex value from 0 to 0xFF can be selected. See "ACK Character" on page 280 for more detailed programming instructions.

NOTE: Setting to previously defined characters such as XON, XOFF, or host commands conflicts with normal operation of these characters. 8-bit data is not recognized when the option "Data Bits" on page 42 has been set as 7 Data Bits.

Select ACK Character Setting

Make a mistake? Scan the CANCEL bar code to abort and not save the entry string. You can then start again at the beginning.

CANCEL

★0x06 'ACK' Character

NAK Character

This setting specifies an ASCII character or hex value to be used as the NAK character. ASCII characters or any hex value from 0 to 0xFF can be selected. See "NAK Character" on page 281 for more detailed programming instructions

NOTE: Setting to previously defined characters such as XON, XOFF, or host commands conflicts with normal operation of these characters. 8-bit data is not recognized when the option "Data Bits" on page 42 has been set as 7 Data Bits.

Select NAK Character Setting

Make a mistake? Scan the CANCEL bar code to abort and not save the entry string. You can then start again at the beginning.

CANCEL

★0x15 'NAK' Character

ACK NAK Timeout Value

This option specifies the amount of time the reader waits for an ACK character from the host following label transmission. The selectable timeout range is 200 milliseconds to 15,000ms (15 seconds) in 200ms increments. A selection of 0 disables the timeout. See "ACK NAK Timeout Value" on page 282 for more detailed programming instructions.

Select ACK NAK Timeout Value Setting

To configure this feature, scan the ENTER/EXIT bar code above, then the bar code at left followed by digits from the Alphanumeric characters in Appendix D representing your desired character(s). End by scanning the ENTER/EXIT bar code again.

Make a mistake? Scan the CANCEL bar code to abort and not save the entry string. You can then start again at the beginning.

CANCEL

★01 ACK NAK Timeout value is 200ms

ACK NAK Retry Count

This feature specifies the number of times the reader retries a label transmission due to a retry condition. The selectable range is from 1 to 254 retries. A selection of 0 disables the count, and a selection of 255 specifies unlimited retries. See "ACK NAK Retry Count" on page 283 for more detailed programming instructions.

Select ACK NAK Retry Count Setting

To configure this feature, scan the ENTER/EXIT bar code above, then the bar code at left followed by digits from the Alphanumeric characters in Appendix D representing your desired character(s). End by scanning the ENTER/EXIT bar code again.

Make a mistake? Scan the CANCEL bar code to abort and not save the entry string. You can then start again at the beginning.

CANCEL

★003 = 3 Retries

ACK NAK Error Handling

This feature specifies the method the reader uses to handle receive errors detected while waiting for an ACK character from the host.

Options are:

- Ignore errors detected
- Process error as valid ACK character
- Process error as valid NAK character



★ACK NAK Error Handling = Ignore Errors Detected



ACK NAK Error Handling = Process Error as Valid ACK Character



ACK NAK Error Handling = Process Error as Valid NAK Character

Indicate Transmission Failure

This option enables/disables the reader's ability to sound an error beep to indicate a transmission failure while in ACK/NAK mode.



Indicate Transmission Failure = Disable Indication



★Indicate Transmission Failure = Enable Indication

Disable Character

Specifies the value of the RS-232 host command used to disable the reader.

ASCII characters or any hex value from 0 to 0xFF can be selected. See "Disable Character" on page 284 for more detailed programming instructions.

Setting to previously defined characters such as XON, XOFF, or host commands conflicts with normal operation of these characters.

Select Disable Character Setting

Make a mistake? Scan the CANCEL bar code to abort and not save the entry string. You can then start again at the beginning.

CANCEL

★0x44 = Disable Character is 'D'

Enable Character

Specifies the value of the RS-232 host command used to enable the reader.

ASCII characters or any hex value from 0 to 0xFF can be selected. See "Enable Character" on page 285for more detailed programming instructions

Setting to previously defined characters such as XON, XOFF, or host commands conflicts with normal operation of these characters.

Select Enable Character Setting

Make a mistake? Scan the CANCEL bar code to abort and not save the entry string. You can then start again at the beginning.

CANCEL

★0x45 = Enable Character is 'E'

CONFIGURATION | KEYBOARD INTERFACE

SECTION CONTENTS

COUNTRY MODE starting on page 54

- Setting Country Mode

OTHER KEYBOARD PARAMETERS starting on page 69

- Encoding Type
- ALT Output Type
- Keyboard Numeric Keypad
- Keyboard Send Control Characters
- USB Keyboard Speed

Use the programming bar codes in this chapter to select options for USB Keyboard Interface. Reference Appendix B, for a listing of standard factory settings. Information about control character emulation which applies to keyboard interfaces is listed in Appendix E, Scancode Tables.

COUNTRY MODE

This feature specifies the country/language supported by the keyboard.

The Country Mode setting is ignored if the interface uses alternate key encoding.

SETUP ON PC TO USE ALT UNIVERSAL

1. Open Registry Edit

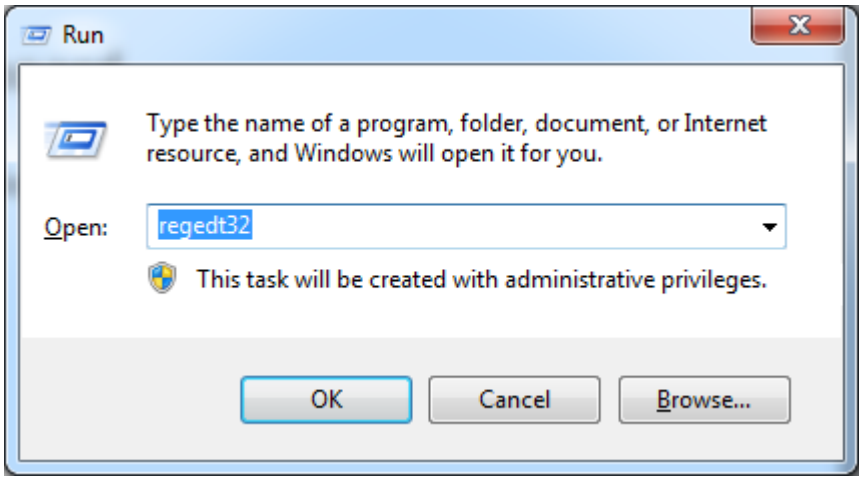

2. Set EnableHexNumpad to 1 as follows:

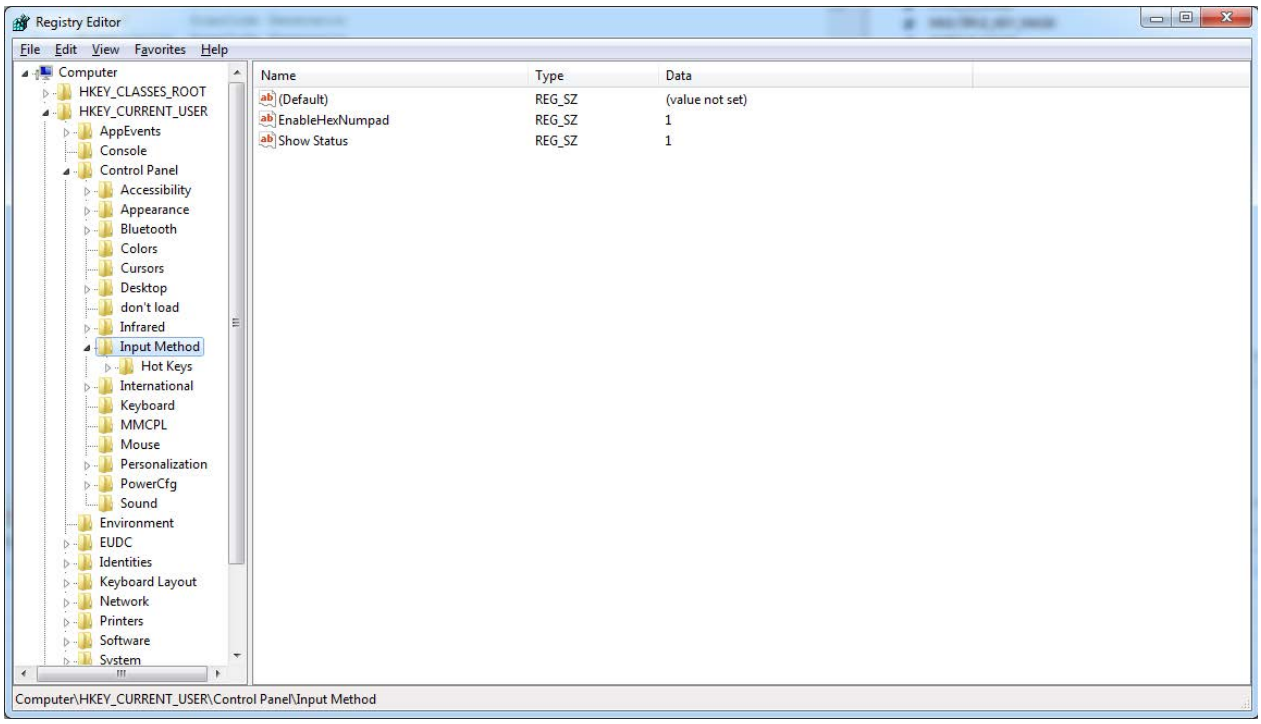

3. Reset the PC.

Setting Country Mode

★United States

French International (Belgian French)

United Kingdom

Danish

French (France)

German

Italian

Setting Country Mode (continued)



Norwegian



Portuguese (Portugal)



Spanish



Swedish



Swiss French



Japanese ASCII



Hungarian

Setting Country Mode (continued)

Czech

SlovaK

Romanian

Croatian

Polish_214

French Canadian Win7

Lithuanian

Setting Country Mode (continued)

Vietnamese

Russian

Arabic 101

Chinese ASCII

Thai-Kedmanee

Albanian

Arabic 102

Setting Country Mode (continued)

Arabic 102 AZERTY

Azeri Cyrillic

Azeri Latin

Belarusian

Bosnian Cyrillic

Bosnian Latin

Bulgarian Cyrillic

Setting Country Mode (continued)



Bulgarian Latin



Canadian French (Legacy)



Canadian Multilingual



Chinese (Simplified)



Chinese (Traditional)



Czech Programmers



Czech QWERTY

Setting Country Mode (continued)

Dutch Netherland

Estonian

Faeroese

Finnish

French (Canada) 2000/XP

French (Canada) 95/98

Galician

Setting Country Mode (continued)



Greek



Greek Latin



Greek Polytonic



Greek220



Greek220 Latin



Greek319



Greek319 Latin

Setting Country Mode (continued)

Hebrew Israel

Hungarian_101KEY

Icelandic

Irish

Italian_142

Japanese (Shift-JIS)

Kazakh

Setting Country Mode (continued)

Korean (Hangul)

Korean ASCII

Kyrgyz Cyrillic

Latin America

Latvian

Latvian QWERTY

Lithuanian_IBM

Setting Country Mode (continued)

Macedonian -FYROM

Maltese_47KEY

Mongolian-Cyrillic

Polish Programmer

Portuguese Brazil

Portuguese Brazilian ABNT

Portuguese Brazilian ABNT2

Setting Country Mode (continued)

Romanian Legacy

Romanian Programmer

Romanian Standard

Russian Typewriter

Serbian Cyrillic

Serbian Latin

Slovak QWERTY

Setting Country Mode (continued)

Slovenian

Spanish Variation

Swiss German

Tatar

Turkish F

Turkish Q

Ukrainian

Setting Country Mode (continued)

US Dvorak

US Dvorak Left Hand

US Dvorak Right Hand

US English (Mac)

US English (North American)

US International

Uzbek Cyrillic

OTHER KEYBOARD PARAMETERS

Encoding Type

★Encoding Type = Don't Use Encoding

Encoding Type = UTF_8

Encoding Type = Windows 874

Encoding Type = Windows 932

Encoding Type = Windows 936

Encoding Type = Windows 949

Encoding Type = Windows 950

Encoding Type (continued)



Encoding Type = Windows 1250



Encoding Type = Windows 1251



Encoding Type = Windows 1252



Encoding Type = Windows 1253



Encoding Type = Windows 1254



Encoding Type = Windows 1255



Encoding Type = Windows 1256

Encoding Type (continued)

Encoding Type = Windows 1257

Encoding Type = Windows 1258

Encoding Type = Windows 20866

Encoding Type = Windows 54936

Encoding Type = ISO 8859-1

Encoding Type = ISO 8859-2

Encoding Type = ISO 8859-3

Encoding Type (continued)



Encoding Type = ISO 8859-4



Encoding Type = ISO 8859-5



Encoding Type = ISO 8859-6



Encoding Type = ISO 8859-7



Encoding Type = ISO 8859-8



Encoding Type = ISO 8859-9



Encoding Type = ISO 8859-10

Encoding Type (continued)



Encoding Type = ISO 8859-11



Encoding Type = ISO 8859-13



Encoding Type = ISO 8859-14



Encoding Type = ISO 8859-15



Encoding Type = ISO 8859-16



Encoding Type = MS-DOS 437



Encoding Type = MS-DOS 737

Encoding Type (continued)



Encoding Type = MS-DOS 775



Encoding Type = MS-DOS 850



Encoding Type = MS-DOS 852



Encoding Type = MS-DOS 855



Encoding Type = MS-DOS 857



Encoding Type = MS-DOS 860



Encoding Type = MS-DOS 861

Encoding Type (continued)



Encoding Type = MS-DOS 862



Encoding Type = MS-DOS 863



Encoding Type = MS-DOS 865



Encoding Type = MS-DOS 866



Encoding Type = MS-DOS 869



Encoding Type = Mac CP10000

ALT Output Type

This option specifies the encode type of ALT Mode when the reader sends Output Keyboard Data in Alt Mode. (Be aware that the reader may switch automatically between ALT mode & Normal Keyboard Scancode, to correctly display some characters that are not present in the current Keyboard Country).



ALT Output Type = ALT Codepage
(use on non Unicode application: Notepad)



★ALT Output Type = ALT Unicode
(use on Unicode application: Word)



ALT Output Type = ALT Universal
(Use for all)



ALT Output Type = ALT Unicode for Linux

Keyboard Numeric Keypad

This feature specifies if numeric characters will be sent using the standard keys or the numeric keypad.



★Keyboard Numeric Keypad = Standard Keys



Keyboard Numeric Keypad = Numeric Keypad

Keyboard Send Control Characters

This feature is used by the USB Keyboard interface. It specifies how the reader transmits ASCII control characters to the host. Reference Appendix E Scancode Tables for more information about control characters.

Options are as follows:

Send Ctrl+Key : ASCII characters from 00H to 0x1FH inclusive are transmitted in the format Ctrl+Key. Special keys are available in the range from 81H to A1.

Send Ctrl+Shift+Key : The behavior is the same as above, but control keys are sent in the format Ctrl+Shift+Keys.

Send Special Function Key : Send characters between 00H and 1FH according to the special function key mapping table (see "Interface Type PC AT PS/2 Alt Mode or USB-Keyboard Alt Mode" on page 348). This is used to send keys that are not in the normal ASCII set. A unique set is provided for each available scancode set.



★Keyboard Send Control Characters = Send Ctrl+Key



Keyboard Send Control Characters = Send Ctrl+Shift+Key



Keyboard Send Control Characters = Send Special Function Key

USB Keyboard Speed

This option specifies the USB poll rate for a USB Keyboard.

NOTE: This feature applies ONLY to the USB Keyboard interface.

★USB Keyboard Speed = 1ms

USB Keyboard Speed = 2ms

USB Keyboard Speed = 3ms

USB Keyboard Speed = 5ms

USB Keyboard Speed = 7ms

USB Keyboard Speed = 10ms

NOTES

CONFIGURATION | USB-OEM INTERFACE

SECTION CONTENTS
• USB-OEM Device Usage

USB-OEM Device Usage

The USB-OEM protocol allows for the reader to be identified as one of two different types of bar code reader. Depending on what other reader you may already have connected to a USB-OEM POS, you may need to change this setting to enable all devices to communicate.

Options are:

- Tabletop Scanner
- Handheld Scanner

NOTE: This feature is not compatible with Multiple Labels Reading in a Volume.

USB-OEM Device Usage = Tabletop Scanner

★USB-OEM Device Usage = Handheld Scanner

CONFIGURATION | DATA FORMAT

SECTION CONTENTS

GLOBAL SETTINGS starting on page 84

- Global Prefix/Suffix
- Case Conversion
- Character Conversion
- Global AIM ID
- GS1-128 AIM ID

LABEL ID starting on page 87

- Label ID: Set Individually Per Symbology
- Label ID Control
- Label ID Symbology Selection

GLOBAL SETTINGS

Global Prefix/Suffix

Up to 20 ASCII characters may be added as a prefix (in a position before the bar code data) and/or as a suffix (in a position following the bar code data). See page 287 in "References" for more detailed programming instructions.

To configure, scan the ENTER/EXIT PROGRAMMING MODE bar code above, then the bar code at left followed by the digits from the Alphanumeric characters in Appendix D, Keypad representing your desired character(s). End by scanning the ENTER/EXIT bar code.



Set Global Prefix



Set Global Suffix

To configure, scan the ENTER/EXIT PROGRAMMING MODE bar code above, then the bar code at left followed by the digits from the Alphanumeric characters in Appendix D, Keypad representing your desired character(s). End by scanning the ENTER/EXIT bar code.

Make a mistake? Scan the CANCEL bar code to abort and not save the entry string. You can then start again at the beginning.



CANCEL

★No Global Prefix

★Global Suffix = Global Suffix = 0x0D(CR)

Case Conversion

This feature allows conversion of the case of all alphabetic characters to upper or lower case.

NOTE: Case conversion affects ONLY scanned bar code data, and does not affect Label ID, Prefix, Suffix, or other appended data.

★Case Conversion = Disable (no case conversion)

Case Conversion = Convert to upper case

Case Conversion = Convert to lower case

Character Conversion

Character conversion is an eight byte configuration item. The eight bytes are 4 character pairs represented in hexadecimal ASCII values. The first character in the pair is the character that will be converted. The second character in the pair is the character to convert to. If the character to convert in a pair is FF, then no conversion is done. See page 293 in "References" for more detailed programming instructions.

Configure Character Conversion

To configure, scan the ENTER/EXIT PROGRAMMING MODE bar code above, then the bar code at left followed by the digits from the Alphanumeric characters in Appendix D, Keypad representing your desired character(s). End by scanning the ENTER/EXIT bar code.

Make a mistake? Scan the CANCEL bar code to abort and not save the entry string. You can then start again at the beginning.

CANCEL

★0xFFFFFFFFFFFFFFFF
(no character conversion)

Global AIM ID

NOTE: This feature enables/disables addition of AIM IDs for all symbology types.

AIM label identifiers (as opposed to custom characters you select yourself as with label identifiers) can be included with scanned bar code data. See for more detailed programming instructions.

★Global AIM ID = Disable

Global AIM ID = Enable

GS1-128 AIM ID

If Global AIM ID is disabled, the AIM ID for GS1-128 can be enabled/disabled independently. The AIM ID for GS1-128 is a]C1,]C2.

AIM IDs for other symbologies can be enabled/disabled independently as well. Contact Customer Support for assistance.

★Global AIM ID = Disable

Global AIM ID = Enable

LABEL ID

A Label ID is a customizable code of up to three ASCII characters (each can be one of hex 0x01-0xFF), used to identify a bar code (symbology) type. It can be appended previous to or following the transmitted bar code data depending upon how this option is enabled. This feature provides options for configuring custom Label IDs as a pre-loaded set (see Label ID: Pre-loaded Sets below) or individually per symbology (see "Label ID: Set Individually Per Symbology" on page 88). If you wish to program the reader to always include an industry standard label identifier for ALL symbology types, see the previous feature "Global AIM ID" on page 86.

Label ID: Pre-loaded Sets

The reader supports two pre-loaded sets of Label IDs, the USA set and the EU set. See "Label ID: Pre-loaded Sets" on page 289 for more information concerning the pre-loaded sets that are provided.

CAUTION: When changing from one Label ID set to another, all other reader configuration settings, including the host interface type, will be erased and set to the factory defaults. Any custom configuration or custom defaults will be lost.



★Label ID Pre-loaded Set = USA Set



Label ID Pre-loaded Set = EU Set

Label ID: Set Individually Per Symbology

This feature configures a Label ID individually for a single symbology.

NOTE: This setting requires the scanning of bar codes from multiple sections. See "Label ID: Set Individually Per Symbology" on page 291 **for more detailed programming instructions.**

Label ID Control

This option controls whether a Label ID is disabled, or sent as a prefix or suffix for a given symbology type.

★Label ID Transmission = Disable

Label ID Transmission = Enable as Prefix

Label ID Transmission = Enable as Suffix



Label ID Symbology Selection

This option selects the symbology for which a Label ID is to be configured. See "Label ID: Set Individually Per Symbology" on page 291 for full instructions.

Make a mistake? Scan the CANCEL bar code to abort and not save the entry string. You can then start again at the beginning.



CANCEL



Set UPC-A Label ID Character(s)



Set UPC-A/P2 Label ID Character(s)



Set UPC-A/P5 Label ID Character(s)



Set UPC-E Label ID Character(s)



Set UPC-E/P2 Label ID Character(s)



Set UPC-E/P5 Label ID Character(s)



Set EAN-13 Label ID Character(s)

Label ID Symbology Selection (continued)



Set EAN-13/P2 Label ID Character(s)



Set EAN-13/P5 Label ID Character(s)



Set ISBN Label ID Character(s)



Set ISSN Label ID Character(s)



Set EAN-8 Label ID Character(s)



Set EAN-8 Label ID Character(s)



Set EAN-8 Label ID Character(s)



Set GS1 DataBar Omnidirectional Label ID Character(s)

Label ID Symbology Selection (continued)



Set GS1 DataBar Limited Label ID Character(s)



Set Code 32 Label ID Character(s)



Set Code 128 Label ID Character(s)



Set Interleaved 2 of 5 Label ID Character(s)



Set GS1 DataBar Expanded Label ID Character(s)



Set Code 39 Label ID Character(s)



Set Code 39 CIP HR Label ID Character(s)



Set Code GS1-128 Label ID Character(s)

Label ID Symbology Selection (continued)



Set Interleaved 2 of 5 CIP HR Label ID Character(s)



Datalogic 2 of 5 Label ID Character(s)



Standard 2 of 5 Label ID Character(s)



Industrial 2 of 5 Label ID Character(s)



IATA Label ID Character(s)



Codabar Label ID Character(s)



ABC Codabar Label ID Character(s)



ISBT 128 Label ID Character(s)
(single and concatenated)

Label ID Symbology Selection (continued)



Code 11 Label ID Character(s)



MSI Label ID Character(s)



Plessey Label ID Character(s)



Anker Plessey Label ID Character(s)



Set Matrix 2 of 5 Label ID Character(s)

CONFIGURATION | READING PARAMETERS

SECTION CONTENTS

SCANNING FEATURES starting on page 95

- Scan Mode
- Scanning Active Time
- Flash On Time
- Flash Off Time
- Double Read Timeout
- Stand /Base Detection Behavior
- Stand Mode/Object Detection Indication (Stand Mode Flash)
- Stand Mode/Object Detection Sensitivity
- Stand Mode/Object Detection Illumination Off Time
- Illumination Intensity
- Corded Stand Mode
- Dock Detection Beep
- Corded Stand Beep

LED AND BEEPER INDICATORS starting on page 104

- Power On Alert
- Good Read Beep Type
- Good Read Beep Frequency
- Good Read Beep Length
- Good Read Beeper Volume / Vibration
- Vibration Feedback for Good Read
- Silent Mode
- RGB Good Read Enable
- RGB Good Read Color
- Good Read LED Duration
- Good Read: When to Indicate
- Green Spot Duration

CAMERA CONTROL starting on page 113

- Aiming Pointer
- Aiming Intensity
- Pick Mode
- Pick Mode
- Mobile Phone Mode
- Mobile Phone Saturation Rate
- Set the Illuminator Color
- Decode Negative Image
- Image Capture

MULTIPLE LABEL READING starting on page 117

- Multiple Labels per Frame
- Multiple Labels Ordering by Code Symbology
- Multiple Labels Ordering by Code Length

- **CONFIGURATION FOR BEDSIDE POINT OF CARE (BPOC) APPLICATIONS** starting on page 119

SCANNING FEATURES

Scan Mode

Selects the reader's scan operating mode. See page 294 in "References" for descriptions.



★Scan Mode = Trigger Single



Scan Mode = Trigger Hold Multiple



Scan Mode = Trigger Pulse Multiple



Scan Mode = Flashing



Scan Mode = Always On



Scan Mode = Object Detection



Scan Mode = Trigger Object Sense

Scanning Active Time

This setting specifies the amount of time that the reader stays in scan ON state once the state is entered. The range for this setting is from 1 to 255 seconds in 1-second increments. See page 295 in “References” for further description of this feature.

Scanning Active Time = 3 seconds

★Scanning Active Time = 5 seconds

Scanning Active Time = 8 seconds

Flash On Time

This feature specifies the ON time for the indicator LED while in Flash Mode. The selectable range is 100 to 9,900 milliseconds (0.1 to 9.9 seconds), in 100 millisecond increments. See page 297 in “References” for detailed information on setting this feature.

Select Flash ON Time Setting

To configure this feature, scan the ENTER/EXIT PROGRAMMING MODE bar code above, then the bar code at left followed by the digits from the Alphanumeric characters in Appendix D, Keypad representing your desired character(s). End by scanning the ENTER/EXIT bar code again.

Make a mistake? Scan the CANCEL bar code to abort and not save the entry string. You can then start again at the beginning.

CANCEL

★10 = Flash is ON for 1 Second

Flash Off Time

This feature specifies the OFF time for the indicator LED while in Flash Mode. The selectable range is 100 to 9,900 milliseconds (0.1 to 9.9 seconds), in 100 millisecond increments. See page 298 in “References” for detailed information on setting this feature.

Select Flash OFF Time Setting

To configure this feature, scan the ENTER/EXIT PROGRAMMING MODE bar code above, then the bar code at left followed by the digits from the Alphanumeric characters in Appendix D, Keypad representing your desired character(s). End by scanning the ENTER/EXIT bar code again.

Make a mistake? Scan the CANCEL bar code to abort and not save the entry string. You can then start again at the beginning.

CANCEL

★06 = Flash is OFF for 600ms

Double Read Timeout

Double Read Timeout prevents a double read of the same label by setting the minimum time allowed between reads of labels of the same symbology and data. If the unit reads a label and sees the same label again within the specified timeout, the second read is ignored. Double Read Timeout does not apply to scan modes that require a trigger pull for each label read.

Double Read Timeout = 0.1 Second

Double Read Timeout = 0.2 Second

Double Read Timeout = 0.3 Second

Double Read Timeout = 0.4 Second

Double Read Timeout (continued)



Double Read Timeout = 0.5 Second



★Double Read Timeout = 0.6 Second



Double Read Timeout = 0.7 Second



Double Read Timeout = 0.8 Second



Double Read Timeout = 0.9 Second



Double Read Timeout = 1 Second

Stand /Base Detection Behavior

Specifies the behavior of the reader when stationary in a stand. There are two conditions which cause the reader to switch to Stand Mode/Object Detection:

- The reader is configured to switch to Stand Mode/Object Detection when stationary.
- The reader is placed into the base station of the base station.

Below are further options concerning Stand Operation.

Ignore Autorecognition: Disables mode switching when the reader is placed in a stand.

Switch to Stand Mode/Object Detection: Automatically switches the reader to Stand Mode/Object Detection when the reader is placed in the stand.

Switch to Always On: Automatically switches the reader to Always On mode when the reader is placed in the stand.

Switch to Flashing: Automatically switches the reader to Flash Mode when the reader is placed in the stand.

NOTE: The default setting for the "Ignore Autorecognition" function applies only to cordless models.

The default setting for "Switch to Stand Mode / Object Detection" applies only to corded models.

★Stand/Base Detection Behavior = Ignore Autorecognition (do not change behavior)

★Stand/Base Detection Behavior = Switch to Stand Mode/Object Detection

Stand/Base Detection Behavior = Switch to Always On

Stand/Base Detection Behavior = Switch to Flashing

Stand Mode/Object Detection Indication (Stand Mode Flash)

This operation is useful for indicating when the reader is in Stand Mode. If enabled, the blue indicator will blink when Stand Mode scanning is active.

★Stand Mode/Object Detection Indication = Disable

Stand Mode/Object Detection Indication = Enable

Stand Mode/Object Detection Sensitivity

Sets the sensitivity level for stand mode/object detection wakeup. Choices are low, medium and high.

Stand/Base Detection Sensitivity = Low

$CSMSE04

★Stand/Base Detection Sensitivity = Medium

Stand/Base Detection Sensitivity = High

Stand Mode/Object Detection Illumination Off Time

Specifies the amount of time reader illumination stays off after pulling the trigger when in Stand Mode/Object Detection. The configurable range is 01 to 32 by 01 in increments of 500ms (500ms to 16 seconds).

Set Illumination OFF Time

To configure, scan the ENTER/EXIT PROGRAMMING MODE bar code above, then the bar code at left followed by the digits from the Alphanumeric characters in Appendix D, Keypad representing your desired character(s). End by scanning the ENTER/EXIT bar code.

Make a mistake? Scan the CANCEL bar code to abort and not save the entry string. You can then start again at the beginning.

CANCEL

★04 = Illumination OFF Time 1 second

Illumination Intensity

With the following settings the illumination intensity can be reduced if needed. Not all hardware versions support this function. Please contact Datalogic Technical Support for more information.

★Illumination Intensity = Full Intensity

Illumination Intensity = Medium Intensity

Illumination Intensity = Reduced Intensity

NOTE: When the Gryphon GBT/GM is on the cradle, it automatically goes on "reduced" mode to optimize charging.

Corded Stand Mode

This parameter sets the Stand Mode operation for corded models only.

★Corded Stand Mode = Disable

Corded Stand Mode = Generic Stand

Corded Stand Mode = Permanent Stand

Corded Stand Mode = Precise Stand

Dock Detection Beep

If enabled, when the Handheld reader is placed in a dock (base station or corded stand), it will beep.

★Dock Detection Beep = Disable

Dock Detection Beep = Enable

Corded Stand Beep

Enables/Disables the beep that indicates when Corded Stand position is detected.

★Corded Stand Beep = Disable

Corded Stand Beep = Enable

LED AND BEEPER INDICATORS

Power On Alert

Disables or enables the indication (from the Beeper) that the reader is receiving power.



Power On Alert = Disable (No Audible Indication)



★Power On Alert = Power-up Beep

Good Read Beep Type

Specifies whether the good read beep has a mono or bitonal beep sound.



★Good Read Beep Type = Mono



Good Read Beep Type = Bitonal

Good Read Beep Frequency

Adjusts the good read beep to sound at a selectable low, medium or high frequency, selectable from the list below. (Controls the beeper's pitch/tone.)



Good Read Beep Frequency = Low



Good Read Beep Frequency = Medium



★Good Read Beep Frequency = High

Good Read Beep Length

Good Read Beep Length = 60 msec

★Good Read Beep Length = 80 msec

Good Read Beep Length = 100 msec

Good Read Beep Length = 120 msec

Good Read Beep Length = 140 msec

Good Read Beep Length = 160 msec

Good Read Beep Length = 180 msec

Good Read Beep Length = 200 msec

Good Read Beeper Volume / Vibration

Selects the beeper volume (loudness) upon a good read beep. There are three selectable volume levels.

In addition to three selectable volume levels, the user can also activate a vibration feedback for good read.

Good Read Beeper Volume = Beeper Off

Good Read Beeper Volume = Low

Good Read Beeper Volume = Medium

★Good Read Beeper Volume = High

Vibration Feedback for Good Read

★Vibration Feedback for Good Read = Enable Vibration

Vibration Feedback for Good Read = Disable Vibration

NOTE: Only for mobile GM/GBT.

Silent Mode

If needed, audible indications can be disabled by scanning the labels below.

Please note that some important audible notifications are not muted in silent mode and other notifications are replaced by vibration or visual indications.

All changes in audible notifications are summarized here:

- Good Read beep is replaced with vibration
- Power on beep is replaced with vibration
- Connection / Disconnection / out of radio range beeps are replaced with blue LED and vibration
- Error beep, RF Error/timeout beeps, chirp beeps are replaced with red 3GL and vibration
- Battery beeps, programming labels, and RF paging beeps are not muted



Silent Mode = Enable



★Silent Mode = Disable

RGB Good Read Enable

Specifies whether the RGB good read indicator is enabled or disabled.



RGB Good Read = Disable



★RGB Good Read = Enable

RGB Good Read Color

Selects the good read LED color.



RGB Good Read Color = RED



★RGB Good Read Color = GREEN



RGB Good Read Color = BLUE

Good Read LED Duration

This feature specifies the amount of time that the Good Read LED remains on following a good read. The good read LED on time can be set within a range of 100 milliseconds to 25,500 milliseconds (0.1 to 25.5 seconds) in 100ms increments. A setting of 00 keeps the LED on until the next trigger pull.

See page 299 in “References” for detailed instructions and examples for setting this feature.

Good Read LED Duration Setting = Keep LED on until next trigger pull

Select Good Read LED Duration Setting

To configure this feature, scan the ENTER/EXIT PROGRAMMING MODE bar code above, then the bar code at left followed by the digits from the Alphanumeric characters in Appendix D, Keypad representing your desired character(s). End by scanning the ENTER/EXIT bar code again.

Make a mistake? Scan the CANCEL bar code to abort and not save the entry string. You can then start again at the beginning.

CANCEL

★003 = Good Read LED stays on for 300 msec.

NOTE: Indicators are dimmed during sleep.

Good Read: When to Indicate

This feature specifies when the reader will provide indication (beep and/or flash its green LED) upon successfully reading a bar code.



★Indicate Good Read = After Decode



Indicate Good Read = After Transmit



Indicate Good Read =
After CTS goes inactive then active

Green Spot Duration

Specifies the duration of the good read pointer beam after a good read.

Green Spot Duration = Disable (Green Spot is Off)

★Green Spot Duration = Short (300 msec)

Green Spot Duration = Medium (500 msec)

Green Spot Duration = Long (800 msec)

CAMERA CONTROL

Aiming Pointer

Enables/disables the aiming pointer for all symbologies.



Aiming Pointer = Disable



★Aiming Pointer = Enable



Aiming Pointer = Green Spot

Aiming Intensity

Configures the illumination intensity of the Aiming.



Aiming Intensity = Eco



Aiming Intensity = Low



★Aiming Intensity = Medium



Aiming Intensity = Maximum

Pick Mode

Specifies the ability of the reader to decode labels only when they are close to the center of the aiming pattern. This allows the reader to accurately target labels when they are placed close together, such as on a pick sheet.

The Pick Mode can be enabled only in Trigger Single Scan Mode.

NOTE: This feature is not compatible with Multiple Labels Reading in a Volume.

★Pick Mode = Disable

Pick Mode = Enable

Mobile Phone Mode

This mode is useful for scanning bar codes displayed on a mobile phone. Other options for this feature can be configured using the Datalogic Aladdin application.

Mobile Phone Mode = Disable

★Mobile Phone Mode = Enable

Mobile Phone Mode = Enhanced

Mobile Phone Saturation Rate

This specifies the minimum number of saturated pixels (every 1000 pixels) in the image in order to activate the Mobile Phone mode.

★Mobile Phone Saturation Rate = 00

Mobile Phone Saturation Rate = 01

Mobile Phone Saturation Rate = 02

Set the Illuminator Color

The dual-color LED illumination system, offering user-selectable warm white or red light, allows seamless adaptation to any application on the fly.

White illumination improves decoding of colored barcodes, enhances image capture, and is ideal for customer-facing tasks.

Red illumination delivers superior performance in most applications and fully supports Digimarc®.

★Set the Illuminator color = White

Set the Illuminator color = Red

Decode Negative Image

Enable/Disable the ability to decode a negative image for all symbologies. When this feature is enabled, you will be unable to read normally-printed labels or programming labels in this manual. Scan the “Disable” bar code below to return the reader to its default for this feature. To set decoding for only 2D codes, go to "2D Normal/Inverse Symbol Control" on page 213. For additional options, see the Aladdin configuration application.

NOTE: Unlike some programming features and options, Decode Negative Image selections require that you scan only one programming bar code label. DO NOT scan an ENTER/EXIT bar code prior to scanning a Decode Negative Image bar code.

CAUTION: When this feature is enabled, you will be unable to read other programming labels in this manual.

★Decode Negative Image = Disable

Decode Negative Image = Enable

Image Capture

For information and a list of options for Image Capture, use the Datalogic Aladdin configuration application, available for free download from the Datalogic Scanning website.

MULTIPLE LABEL READING

In standard (default) mode, when the reader's aiming system is activated (by a trigger pull, motion or other method depending on the mode), it then acquires and processes each image in the area in front of it (the Volume). In this case, the reader stops processing the image once it decodes a label. If several labels are present in the volume, only the first label encountered is decoded and sent.

When Multiple Reading Mode is enabled, the reader keeps on processing the image until all the labels present are decoded. The reader then sorts the data from all the bar codes (if configured to do so) before transmitting it.

Multiple Labels per Frame

Specifies the ability of the reader to decode and transmit a set of code labels in a specific volume and in a single frame of time. When in Multiple Labels per Frame the reader beeps and turns on the good read LED indication for each code read in a frame.

When Multiple Labels Mode is enabled, ISBT pairing, ABC Codabar pairing, and composites are not allowed.



★Multiple Labels per Frame = Disable



Multiple Labels per Frame = Enable

Multiple Labels Ordering by Code Symbology

This feature allows you to specify the order multiple labels are transmitted by symbology type, when Multiple Labels per Frame is enabled.

Select Symbologies for Multiple Labels Ordering

To configure, scan the ENTER/EXIT PROGRAMMING MODE bar code above, then the bar code at left followed by the digits from the Alphanumeric characters in Appendix D, Keypad representing your desired character(s). End by scanning the ENTER/EXIT bar code.

Make a mistake? Scan the CANCEL bar code to abort and not save the entry string. You can then start again at the beginning.

CANCEL

★000000000000 = Random order

Multiple Labels Ordering by Code Length

Specifies the transmission ordering by code length, when Multiple Labels per Frame is enabled.

★Multiple Labels Ordering = Disable

Multiple Labels Ordering = Transmit Increasing Length Order

Multiple Labels Ordering = Transmit Decreasing Length Order

CONFIGURATION FOR BEDSIDE POINT OF CARE (BPOC) APPLICATIONS

BEDSIDE POINT OF CARE (BPOC) configurations apply a predefined set of hospital-specific barcodes and enable several related features, such as the low-volume setting.

BPOC for GD4600 models

USB Keyboard Interface

NOTE: Before selecting the desired interface, read the interface code first.

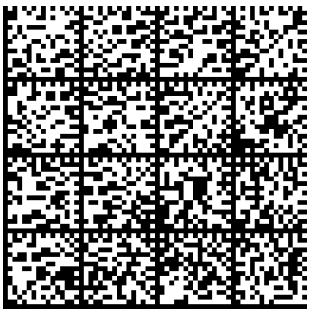

USB-OEM

NOTE: Before selecting the desired interface, read the interface code first.

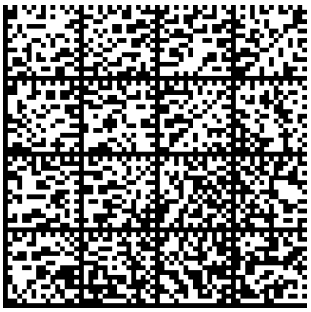

BPOC for GBT-GM4600 models

USB Keyboard Interface

NOTE: Before selecting the desired interface, read the interface code first.

USB-OEM

NOTE: Before selecting the desired interface, read the interface code first.

CONFIGURATION | 1D SYMBOLOGIES

SECTION CONTENTS

DISABLE ALL SYMBOLOGIES starting on page 122

COUPON CONTROL starting on page 122

UPC-A starting on page 123

UPC-E starting on page 125

EAN-13 starting on page 128

EAN-8 starting on page 131

UPC/EAN GLOBAL SETTINGS starting on page 133

GS1 DATABAR™ OMNIDIRECTIONAL starting on page 137

GS1 DATABAR™ EXPANDED starting on page 138

GS1 DATABAR™ LIMITED starting on page 141

CODE 39 starting on page 142

TRIOPTIC CODE starting on page 147

CODE 39 DANISH PPT starting on page 147

CODE 39 PZN starting on page 148

CODE 39 LA POSTE starting on page 148

CODE 32 (ITALIAN PHARMACEUTICAL) starting on page 149

CODE 39 CIP HR (FRENCH PHARMACEUTICAL) starting on page 151

CODE 128 starting on page 152

GS1-128 starting on page 156

INTERLEAVED 2 OF 5 (I 2 OF 5) starting on page 157

INTERLEAVED 2 OF 5, FEBRABAN (DESK MODELS ONLY) starting on page 162

INTERLEAVED 2 OF 5 CIP HR starting on page 163

MATRIX 2 OF 5 starting on page 164

STANDARD 2 OF 5 starting on page 167

COMPRESSED 2 OF 5 starting on page 170

DATALOGIC 2 OF 5 starting on page 173

INDUSTRIAL 2 OF 5 starting on page 176

IATA starting on page 179

FOLLETT 2 OF 5 starting on page 180

CODABAR starting on page 181

ABC CODABAR starting on page 187

ISBT 128 starting on page 189

CODE 11 starting on page 192

CODE 93 starting on page 195

MSI starting on page 199

PHARMACODE starting on page 202

PLESSEY starting on page 205

BC412 starting on page 208

DISABLE ALL SYMBOLOGIES

Scan this label to disable all symbologies.

Disable All Symbologies

COUPON CONTROL

Coupon Control

This feature is used to control the method of processing coupon labels.

Options are:

- Allow all — allow all coupon bar codes to be decoded
- Enable only UPC-A — enables only UPC-A coupon decoding
- Enable only GS1 DataBar — enables only GS1 DataBar coupon decoding

To set this feature:

1. Scan the Enter/Exit bar code.
2. Scan either the enable or disable bar code below. You'll need to cover any unused bar codes on this and the facing page to ensure that the reader sees only the bar code you intend to scan.
3. Complete the programming sequence by scanning the Enter/Exit bar code.

Coupon Control = Allow all

★Coupon Control = Enable only UPC-A

Coupon Control = Enable only GS1 DataBar

UPC-A

The following options apply to the UPC-A symbology.

UPC-A Enable/Disable

When disabled, the reader will not read UPC-A bar codes.



UPC-A = Disable



★UPC-A = Enable

UPC-A Check Character Transmission

Enable this option to transmit the check character along with UPC-A bar code data.



UPC-A Check Character Transmission = Don't Send



★UPC-A Check Character Transmission = Send

Expand UPC-A to EAN-13

Expands UPC-A data to the EAN-13 data format. Selecting this feature also changes the symbology ID to match those required for EAN-13.



★UPC-A to EAN-13 = Don't Expand



UPC-A to EAN-13 = Expand

UPC-A Number System Character Transmission

This feature enables/disables transmission of the UPC-A number system character.



UPC-A Number System Character = Do not transmit



★UPC-A Number System Character = Transmit

UPC-E

The following options apply to the UPC-E symbology.

UPC-E Enable/Disable

When disabled, the reader will not read UPC-E bar codes.



UPC-E = Disable



★UPC-E = Enable

UPC-E Check Character Transmission

Enable this option to transmit the check character along with UPC-E bar code data.



UPC-E Check Character Transmission = Don't Send



★UPC-E Check Character Transmission = Send

Expand UPC-E to EAN-13

Expands UPC-E data to the EAN-13 data format. Selecting this feature also changes the symbology ID to match those required for EAN-13.



★UPC-E to EAN-13 = Don't Expand



UPC-E to EAN-13 = Expand

Expand UPC-E to UPC-A

Expands UPC-E data to the UPC-A data format. Selecting this feature also changes the symbology ID to match those required for UPC-A.



★UPC-E to UPC-A = Don't Expand



UPC-E to UPC-A = Expand

UPC-E Number System Character Transmission

This feature enables/disables transmission of the UPC-E number system character.



UPC-E Number System Character = Do not transmit



★UPC-E Number System Character = Transmit

GTIN Formatting

This feature enables/disables the ability to convert UPC-E, UPC-A, EAN-8, and EAN-13 labels into the GTIN 14-character format.



★GTIN Formatting = Disable



GTIN Formatting = Enable

EAN-13

The following options apply to the EAN-13 symbology.

EAN-13 Enable/Disable

When disabled, the reader will not read EAN-13 bar codes.

EAN-13 = Disable

★EAN-13 = Enable

EAN-13 Check Character Transmission

Enable this option to transmit the check character along with EAN-13 bar code data.

EAN-13 Check Character Transmission = Don't Send

★EAN-13 Check Character Transmission = Send

EAN-13 Flag 1 Character

Enables/disables transmission of an EAN/JAN-13 Flag1 character. The Flag 1 character is the first character of the label



EAN-13 Flag 1 Char = Don't transmit



★EAN-13 Flag 1 Char = Transmit

EAN-13 to ISBN Conversion

This option enables/disables conversion of EAN-13/JAN-13 Bookland labels starting with 978 to ISBN labels.



★EAN-13 ISBN Conversion = Disable



EAN-13 ISBN Conversion = Enable

EAN-13 to ISSN Conversion

Enables/disables conversion of EAN/JAN-13 Bookland labels starting with 977 to ISSN labels.



★ISSN = Disable



ISSN = Enable

EAN-8

The following options apply to the EAN-8 symbology.

EAN-8 Enable/Disable

When disabled, the reader will not read EAN-8 bar codes.



EAN-8 = Disable



★EAN-8 = Enable

EAN-8 Check Character Transmission

Enable this option to transmit the check character along with EAN-8 bar code data.



EAN-8 Check Character Transmission = Don't Send



★EAN-8 Check Character Transmission = Send

Expand EAN-8 to EAN-13

Enable this option to expand EAN-8/JAN-8 labels to EAN-13/JAN-13.



★EAN-8 to EAN-13 = Don't Expand



EAN-8 to EAN-13 = Expand

UPC/EAN GLOBAL SETTINGS

This section provides configuration settings for UPC-A, UPC-E, EAN 13 and EAN 8 symbologies, and affects all of these unless otherwise marked for each feature description.

UPC/EAN Price Weight Check

This feature enables/disables calculation and verification of price/weight check digits.

Options are

- Disabled
- Enable 4-digit price-weight check-digit calculation
- Enable 5-digit price-weight check-digit calculation
- Enable European 4-digit price-weight check-digit calculation
- Enable European 5-digit price-weight check-digit calculation



★Price Weight Check = Disable



Price Weight Check = 4-digit price-weight check



Price Weight Check = 5-digit price-weight check



Price Weight Check = European 4-digit price-weight check



Price Weight Check = European 5-digit price-weight check

UPC/EAN Quiet Zones

This feature specifies the number of quiet zones for UPC/EAN labels. Quiet zones are blank areas at the ends of a bar code, typically 10 times the width of the narrowest bar or space in the label. The property applies to all EAN-UPC symbologies globally and to the ADD-ONs.

UPC/EAN Quiet Zones = One Module

★UPC/EAN Quiet Zones = Two Modules

UPC/EAN Quiet Zones = Three Modules

UPC/EAN Quiet Zones = Four Modules

UPC/EAN Quiet Zones = Five Modules

UPC/EAN Quiet Zones = Six Modules

UPC/EAN Quiet Zones = Seven Modules

UPC/EAN Quiet Zones = Eight Modules

Add-Ons

The following features apply to optional add-ons.

NOTE: Contact Customer Support for advanced programming of optional and conditional add-ons.

Optional Add-ons

The reader can be enabled to optionally read the following add-ons (supplementals):

- P2
- P5

NOTE: If a UPC/EAN base label and a an add-on are both decoded, the reader will transmit the base label and add-on. If a UPC/EAN base label is decoded without an add-on, the base label will be transmitted without an add-on.

Conditional add-on settings (if enabled) are considered by the reader before optional add-on settings.

★Optional Add-Ons = Disable P2

Optional Add-Ons = Enable P2

★Optional Add-Ons = Disable P5

Optional Add-Ons = Enable P5

Optional Add-On Timer

This option sets the time the reader will look for an add-on when an add-on fragment has been seen and optional add-ons are enabled.



Optional Add-on Timer = 10ms



Optional Add-on Timer = 20ms



Optional Add-on Timer = 30ms



Optional Add-on Timer = 50ms



★Optional Add-on Timer = 70ms



Optional Add-on Timer = 100ms



Optional Add-on Timer = 160ms

GS1 DATABAR™ OMNIDIRECTIONAL

The following options apply to the GS1 DataBar Omnidirectional (formerly RSS-14) symbology.

GS1 DataBar Omnidirectional Enable/Disable

When disabled, the reader will not read GS1 DataBar Omnidirectional bar codes.



GS1 DataBar Omnidirectional = Disable



★GS1 DataBar Omnidirectional = Enable

GS1 DataBar Omnidirectional to GS1-128 Emulation

When enabled, GS1 DataBar Omnidirectional bar codes will be translated to the GS1-128 label data format.



★GS1 DataBar Omnidirectional to GS1-128 Emulation = Disable



GS1 DataBar Omnidirectional to GS1-128 Emulation = Enable

GS1 DATABAR™ EXPANDED

The following options apply to the GS1 DataBar Expanded (formerly RSS Expanded) symbology.

GS1 DataBar Expanded Enable/Disable

When disabled, the reader will not read GS1 DataBar Expanded bar codes.

★GS1 DataBar Expanded = Disable

GS1 DataBar Expanded = Enable

GS1 DataBar Expanded to GS1-128 Emulation

When enabled, GS1 DataBar Expanded bar codes will be translated to the GS1-128 label data format.

★GS1 DataBar Expanded to GS1-128 Emulation = Disable

GS1 DataBar Expanded to GS1-128 Emulation = Enable

GS1 DataBar Expanded Length Control

This feature specifies either variable length decoding or fixed length decoding for the GS1 DataBar Expanded symbology.

Variable Length: For variable-length decoding, a minimum length may be set.

Fixed Length: For fixed-length decoding, two different lengths may be set.

★GS1 DataBar Expanded Length Control = Variable Length

GS1 DataBar Expanded Length Control = Fixed Length

GS1 DataBar Expanded Set Length 1

This feature specifies one of the bar code lengths for "GS1 DataBar Expanded Length Control" on page 139. Length 1 is the minimum label length if in Variable Length Mode, or the first fixed length if in Fixed Length Mode. Length includes the bar code's data characters only.

The length can be set from 1 to 74 characters. See "Set Length 1" on page 302 for more detailed programming instructions.

Select GS1 DataBar Expanded Set Length 1 Setting

To configure this feature, scan the ENTER/EXIT PROGRAMMING MODE bar code above, then the bar code at left followed by the digits from the Alphanumeric characters in Appendix D, Keypad representing your desired character(s). End by scanning the ENTER/EXIT bar code again.

Make a mistake? Scan the CANCEL bar code to abort and not save the entry string. You can then start again at the beginning.

CANCEL

★Length 1 = 01 (one character)

GS1 DataBar Expanded Set Length 2

This feature specifies one of the bar code lengths for "GS1 DataBar Expanded Length Control" on page 139. Length 2 is the maximum label length if in Variable Length Mode, or the second fixed length if in Fixed Length Mode. Length includes the bar code's data characters only.

The length can be set from 1 to 74 characters. A setting of 00 specifies to ignore this length (only one fixed length). See "Set Length 2" on page 303 for more detailed programming instructions.

Select GS1 DataBar Expanded Set Length 2 Setting

To configure this feature, scan the ENTER/EXIT PROGRAMMING MODE bar code above, then the bar code at left followed by the digits from the Alphanumeric characters in Appendix D, Keypad representing your desired character(s). End by scanning the ENTER/EXIT bar code again.

Make a mistake? Scan the CANCEL bar code to abort and not save the entry string. You can then start again at the beginning.

CANCEL

★Length 2 = 74 (74 characters)

GS1 DATABAR™ LIMITED

The following options apply to the GS1 DataBar Limited (formerly RSS Limited) symbology.

GS1 DataBar Limited Enable/Disable

When disabled, the reader will not read GS1 DataBar Limited bar codes.



GS1 DataBar Limited = Disable



★GS1 DataBar Limited = Enable

GS1 DataBar Limited to GS1-128 Emulation

When enabled, GS1 DataBar Limited bar codes will be translated to the GS1-128 label data format.



★GS1 DataBar Limited to GS1-128 Emulation = Disable



GS1 DataBar Limited to GS1-128 Emulation = Enable

CODE 39

The following options apply to the Code 39 symbology.

Code 39 Enable/Disable

When disabled, the reader will not read Code 39 bar codes.

Code 39 = Disable

★Code 39 = Enable

Code 39 Check Character Calculation

Enable this option to enable/disable calculation and verification of an optional Code 39 check character. When disabled, any check character in the label is treated as a data character.

★Code 39 Check Character Calculation = Don't Calculate

Code 39 Check Character Calculation = Calculate Std Check

Code 39 Check Character Calculation = Calculate Mod 7 Check

Code 39 Check Character Calculation = Enable Italian Post Check



Code 39 Check Character Calculation = Enable Daimler Chrysler Check

Code 39 Check Character Transmission

Enable this option to transmit the check character along with Code 39 bar code data.



Code 39 Check Character Transmission = Don't Send



★Code 39 Check Character Transmission = Send

Code 39 Start/Stop Character Transmission

Enable this option to enable/disable transmission of Code 39 start and stop characters.



★Code 39 Start/Stop Character Transmission = Don't Transmit



Code 39 Start/Stop Character Transmission = Transmit

Code 39 Full ASCII

In Code 39 decoding, this enables/disables the translation of Code 39 characters to Code 39 full-ASCII characters.

★Code 39 Full ASCII = Disable

Code 39 Full ASCII = Enable

Code 39 Quiet Zones

This feature specifies the number of quiet zones for Code 39 labels. Quiet zones are blank areas at the ends of a bar code and are typically 10 times the width of the narrowest bar or space in the label.

★Code 39 Quiet Zones = No Quiet Zones

Code 39 Quiet Zones = Standard Quiet Zones

Code 39 Quiet Zones = Small Quiet Zones

Code 39 Length Control

This feature specifies either variable length decoding or fixed length decoding for the Code 39 symbology.

Variable Length: For variable-length decoding, a minimum length may be set.

Fixed Length: For fixed-length decoding, two different lengths may be set.

★Code 39 Length Control = Variable Length

Code 39 Length Control = Fixed Length

Code 39 Set Length 1

This feature specifies one of the bar code lengths for "Code 39 Length Control" on page 145. Length 1 is the minimum label length if in Variable Length Mode, or the first fixed length if in Fixed Length Mode. Length includes the bar code's check, data, and full-ASCII shift characters. The length does not include start/stop characters.

The length can be set from 0 to 50 characters. See "Set Length 1" on page 302 for more detailed programming instructions.

Select Code 39 Set Length 1 Setting

To configure this feature, scan the ENTER/EXIT PROGRAMMING MODE bar code above, then the bar code at left followed by the digits from the Alphanumeric characters in Appendix D, Keypad representing your desired character(s). End by scanning the ENTER/EXIT bar code again.

Make a mistake? Scan the CANCEL bar code to abort and not save the entry string. You can then start again at the beginning.

CANCEL

★Length 1 = 02 (2 characters)

Code 39 Set Length 2

This feature specifies one of the bar code lengths for "Code 39 Length Control" on page 145. Length 2 is the maximum label length if in Variable Length Mode, or the second fixed length if in Fixed Length Mode. Length includes the bar code's check, data, and full-ASCII shift characters. The length does not include start/stop characters.

The length can be set from 1 to 50 characters. A setting of 00 specifies to ignore this length (only one fixed length). See "Set Length 2" on page 303 for more detailed programming instructions.

Select Code 39 Set Length 2 Setting

To configure this feature, scan the ENTER/EXIT PROGRAMMING MODE bar code above, then the bar code at left followed by the digits from the Alphanumeric characters in Appendix D, Keypad representing your desired character(s). End by scanning the ENTER/EXIT bar code again.

Make a mistake? Scan the CANCEL bar code to abort and not save the entry string. You can then start again at the beginning.

CANCEL

★Length 2 = 50 (50 characters)

TRIOPTIC CODE

The following options apply to the trioptic symbology.

Trioptic Code Enable/Disable

When disabled, the reader will not read Trioptic Code bar codes.



★Trioptic Code = Disable



Trioptic Code = Enable

CODE 39 DANISH PPT

The following options apply to the Code 39 Danish PPT symbology.

Code 39 Danish PPT Enable/Disable

When disabled, the reader will not read Code 39 Danish PPT bar codes.



★Code 39 Danish PPT = Disable



Code 39 Danish PPT = Enable

CODE 39 PZN

The following options apply to the Code 39 PZN symbology.

Code 39 PZN Enable/Disable

When disabled, the reader will not read Code 39 PZN bar codes.



★Code 39 PZN = Disable



Code 39 PZN = Enable

CODE 39 LA POSTE

The following options apply to the Code 39 La Poste symbology.

Code 39 La Poste Enable/Disable

When disabled, the reader will not read Code 39 La Poste bar codes.



★Code 39 La Poste = Disable



Code 39 La Poste = Enable

CODE 32 (ITALIAN PHARMACEUTICAL)

The following options apply to the Code 32 symbology.

Code 32 Enable/Disable

When disabled, the reader will not read Code 32 bar codes.



★Code 32 = Disable



Code 32 = Enable

Code 32 Feature Setting Exceptions

NOTE: The following features are set for Code 32 by using these Code 39 settings:

"Code 39 Quiet Zones" on page 144

"Code 39 Length Control" on page 145

Code 32 Check Character Transmission

Enable this option to transmit the check character along with Code 32 bar code data.



★Code 32 Check Character Transmission = Don't Send



Code 32 Check Character Transmission = Send

Code 32 Start/Stop Character Transmission

Enable this option to enable/disable transmission of Code 32 start and stop characters.



★Code 32 Start/Stop Character Transmission
= Don't Transmit



Code 32 Start/Stop Character Transmission
= Transmit

CODE 39 CIP HR (FRENCH PHARMACEUTICAL)

The following options apply to the Code 39 CIP HR symbology.

Code 39 CIP HR Enable/Disable

Enables/Disables ability of the reader to decode Code 39 CIP HR labels.



★Code 39 CIP HR = Disable



Code 39 CIP HR = Enable

CODE 128

The following options apply to the Code 128 symbology.

Code 128 Enable/Disable

Enables/Disables ability of the reader to decode Code 128 labels.



Code 128 = Disable



★Code 128 = Enable

Expand Code 128 to Code 39

This feature enables/disables expansion of Code 128 labels to Code 39 labels. When enabled, the label identifier for a Code 128 label shall be set to Code 39 and all Code 39 formatting control shall be applied to the label.



★Code 128 to Code 39 = Don't Expand



Code 128 to Code 39 = Expand

Code 128 Check Character Transmission

Enable this option to transmit the check character along with Code 128 bar code data.



★Code 128 Check Character Transmission = Don't Send



Code 128 Check Character Transmission = Send

Code 128 Function Character Transmission

Enables/disables transmission of Code128 function characters 1, 2, 3, and 4.



★Code 128 Function Character Transmission = Don't Send



Code 128 Function Character Transmission = Send

Code 128 Quiet Zones

This feature specifies the number of quiet zones for Code 128 labels. Quiet zones are blank areas at the ends of a bar code and are typically 10 times the width of the narrowest bar or space in the label.



Code 128 Quiet Zones = No Quiet Zones



Code 128 Quiet Zones = Quiet Zone on one side



Code 128 Quiet Zones = Quiet Zones on two sides



★Code 128 Quiet Zones = Auto



Code 128 Quiet Zones = Virtual Quiet Zones on two sides

Code 128 Length Control

This feature specifies either variable length decoding or fixed length decoding for the Code 128 symbology.

Variable Length: For variable-length decoding, a minimum length may be set.

Fixed Length: For fixed-length decoding, two different lengths may be set.



★Code 128 Length Control = Variable Length



Code 128 Length Control = Fixed Length

Code 128 Set Length 1

This feature specifies one of the bar code lengths for "Code 128 Length Control" on page 154. Length 1 is the minimum label length if in Variable Length Mode, or the first fixed length if in Fixed Length Mode. Length includes the bar code's data characters only.

The length can be set from 1 to 80 characters. See "Set Length 1" on page 302 for more detailed programming instructions.

Select Code 128 Set Length 1 Setting

To configure this feature, scan the ENTER/EXIT PROGRAMMING MODE bar code above, then the bar code at left followed by the digits from the Alphanumeric characters in Appendix D, Keypad representing your desired character(s). End by scanning the ENTER/EXIT bar code again.

Make a mistake? Scan the CANCEL bar code to abort and not save the entry string. You can then start again at the beginning.

CANCEL

★Length 1 = 01 (one character)

Code 128 Set Length 2

This feature specifies one of the bar code lengths for "Code 128 Length Control" on page 154. Length 2 is the maximum label length if in Variable Length Mode, or the second fixed length if in Fixed Length Mode. Length includes the bar code's data characters only.

The length can be set from 1 to 80 characters. A setting of 00 specifies to ignore this length (only one fixed length). See "Set Length 2" on page 303 for more detailed programming instructions.

Select Code 128 Set Length 2 Setting

To configure this feature, scan the ENTER/EXIT PROGRAMMING MODE bar code above, then the bar code at left followed by the digits from the Alphanumeric characters in Appendix D, Keypad representing your desired character(s). End by scanning the ENTER/EXIT bar code again.

Make a mistake? Scan the CANCEL bar code to abort and not save the entry string. You can then start again at the beginning.

CANCEL

★Length 2 = 80 (80 characters)

GS1-128

The following options apply to the GS1-128 symbology. (Also known as USS-128, GTIN-128, UCC-128.)

GS1-128 Enable

This option enables/disables the ability of the reader to translate GS1-128 labels to the GS1-128 data format. Options are:

- Transmit GS1-128 labels in Code 128 data format.
- Transmit GS1-128 labels in GS1-128 data format.
- Do not transmit GS1-128 labels.



GS1-128 = Transmit in Code 128 data format



★GS1-128 = Transmit in GS1-128 data format



GS1-128 = Do not transmit GS1-128 labels

INTERLEAVED 2 OF 5 (I 2 OF 5)

The following options apply to the I 2 of 5 symbology.

CAUTION: When reading this symbology, the settings for I 2 of 5 Length Control AND I 2 of 5 Check Character Calculation MUST be enabled to increase decoding safety.

I 2 of 5 Enable/Disable

When disabled, the reader will not read I 2 of 5 bar codes.

I 2 of 5 = Disable

★I 2 of 5 = Enable

I 2 of 5 Check Character Calculation

This option enables/disables calculation and verification of an optional I 2 of 5 check character.



★I 2 of 5 Check Character Calculation = Disable



I 2 of 5 Check Character Calculation = Check Standard (Modulo 10)



I 2 of 5 Check Character Calculation = German Parcel



I 2 of 5 Check Character Calculation = DHL



I 2 of 5 Check Character Calculation = Daimler Chrysler

I 2 of 5 Check Character Calculation (continued)

I 2 of 5 Check Character Calculation
= Bosch

I 2 of 5 Check Character Calculation
= Italian Post

I 2 of 5 Check Character Transmission

Enable this option to transmit the check character along with I 2 of 5 bar code data.

NOTE: This feature is valid only when I 2 of 5 Check Character Calculation is enabled.

I 2 of 5 Check Character Transmission = Don't Send

★I 2 of 5 Check Character Transmission = Send

I 2 of 5 Length Control

This feature specifies either variable length decoding or fixed length decoding for the I 2 of 5 symbology.

Variable Length: For variable-length decoding, a minimum length may be set.

Fixed Length: For fixed-length decoding, two different lengths may be set.

★I 2 of 5 Length Control = Variable Length

I 2 of 5 Length Control = Fixed Length

I 2 of 5 Set Length 1

This feature specifies one of the bar code lengths for "I 2 of 5 Length Control" on page 160. Length 1 is the minimum label length if in Variable Length Mode, or the first fixed length if in Fixed Length Mode. The length includes the bar code's check and data characters. The length can be set from 2 to 50 characters in increments of two. See "Set Length 1" on page 302 for more detailed programming instructions.

Select I 2 of 5 Set Length 1 Setting

To configure this feature, scan the ENTER/EXIT PROGRAMMING MODE bar code above, then the bar code at left followed by the digits from the Alphanumeric characters in Appendix D, Keypad representing your desired character(s). End by scanning the ENTER/EXIT bar code again.

Make a mistake? Scan the CANCEL bar code to abort and not save the entry string. You can then start again at the beginning.

CANCEL

★Length 1 = 06 (6 characters)

I 2 of 5 Set Length 2

This feature specifies one of the bar code lengths for "I 2 of 5 Length Control" on page 160. Length 2 is the maximum label length if in Variable Length Mode, or the second fixed length if in Fixed Length Mode. The length includes the bar code's check and data characters. The length can be set from 2 to 50 characters in increments of two. A setting of 00 specifies to ignore this length (only one fixed length). See "Set Length 2" on page 303 for more detailed programming instructions.

Select I 2 of 5 Set Length 2 Setting

To configure this feature, scan the ENTER/EXIT PROGRAMMING MODE bar code above, then the bar code at left followed by the digits from the Alphanumeric characters in Appendix D, Keypad representing your desired character(s). End by scanning the ENTER/EXIT bar code again.

Make a mistake? Scan the CANCEL bar code to abort and not save the entry string. You can then start again at the beginning.

CANCEL

★Length 2 = 50 (50 characters)

INTERLEAVED 2 OF 5, FEBRABAN (DESK MODELS ONLY)

Interleaved 2 of 5, Febraban format Enable / Disable

NOTE: Interleaved 2 of 5 shall be enabled before enabling Febraban variant.

Enables/Disables ability of reader to decode Interleaved 2 of 5, Febraban format.

★2 of 5, Febraban format = Disable

2 of 5, Febraban format = Enable

INTERLEAVED 2 OF 5 CIP HR

The following options apply to the Interleaved 2 of 5 CIP HR symbology.

Interleaved 2 of 5 CIP HR Enable/Disable

Enables/Disables ability of the reader to decode Interleaved 2 of 5 CIP HR labels.



★Interleaved 2 of 5 CIP HR = Disable



Interleaved 2 of 5 CIP HR = Enable

MATRIX 2 OF 5

The following options apply to the Matrix 2 of 5 symbology.

Matrix 2 of 5 Enable/Disable

When disabled, the reader will not read Matrix 2 of 5 bar codes.

★Matrix 2 of 5 = Disable

Matrix 2 of 5 = Enable

Matrix 2 of 5 Check Character Calculation

This option enables/disables calculation and verification of an optional Matrix 2 of 5 check character.

★Matrix 2 of 5 Check Character Calculation = Disable

Matrix 2 of 5 Check Character Calculation = Enable

Matrix 2 of 5 Check Character Transmission

This feature enables/disables transmission of an optional Matrix 2 of 5 check character.



Matrix 2 of 5 Check Character Transmission
= Don't Send



★Matrix 2 of 5 Check Character Transmission
= Send

Matrix 2 of 5 Length Control

This feature specifies either variable length decoding or fixed length decoding for the Matrix 2 of 5 symbology.

Variable Length: For variable-length decoding, a minimum length may be set.

Fixed Length: For fixed-length decoding, two different lengths may be set.



★Matrix 2 of 5 Length Control = Variable Length



Matrix 2 of 5 Length Control = Fixed Length

Matrix 2 of 5 Set Length 1

This feature specifies one of the bar code lengths for "Standard 2 of 5 Length Control" on page 168. Length 1 is the minimum label length if in Variable Length Mode, or the first fixed length if in Fixed Length Mode. The length includes the bar code's check and data characters.

The length can be set from 1 to 50 characters. See "Set Length 1" on page 302 for more detailed programming instructions.

Select Matrix 2 of 5 Length 1 Setting

To configure this feature, scan the ENTER/EXIT PROGRAMMING MODE bar code above, then the bar code at left followed by the digits from the Alphanumeric characters in Appendix D, Keypad representing your desired character(s). End by scanning the ENTER/EXIT bar code again.

Make a mistake? Scan the CANCEL bar code to abort and not save the entry string. You can then start again at the beginning.

CANCEL

★Length 1 = 08 (8 characters)

Matrix 2 of 5 Set Length 2

This feature specifies one of the bar code lengths for "Standard 2 of 5 Length Control" on page 168. Length 2 is the maximum label length if in Variable Length Mode, or the second fixed length if in Fixed Length Mode. The length includes the bar code's check and data characters.

The length can be set from 1 to 50 characters. A setting of 00 specifies to ignore this length (only one fixed length). See "Set Length 2" on page 303 for more detailed programming instructions.

Select Matrix 2 of 5 Set Length 2 Setting

To configure this feature, scan the ENTER/EXIT PROGRAMMING MODE bar code above, then the bar code at left followed by the digits from the Alphanumeric characters in Appendix D, Keypad representing your desired character(s). End by scanning the ENTER/EXIT bar code again.

Make a mistake? Scan the CANCEL bar code to abort and not save the entry string. You can then start again at the beginning.

CANCEL

★Length 2 = 50 (50 characters)

STANDARD 2 OF 5

The following options apply to the Standard 2 of 5 symbology.

Standard 2 of 5 Enable/Disable

When disabled, the reader will not read Standard 2 of 5 bar codes.

★Standard 2 of 5 = Disable

Standard 2 of 5 = Enable

Standard 2 of 5 Check Character Calculation

This option enables/disables calculation and verification of an optional Standard 2 of 5 check character.

★Standard 2 of 5 Check Character Calculation = Disable

Standard 2 of 5 Check Character Calculation = Enable

Standard 2 of 5 Check Character Transmission

This feature enables/disables transmission of an optional Standard 2 of 5 check character.

Standard 2 of 5 Check Character Transmission = Don't Send

★Standard 2 of 5 Check Character Transmission = Send

Standard 2 of 5 Length Control

This feature specifies either variable length decoding or fixed length decoding for the Standard 2 of 5 symbology.

Variable Length: For variable-length decoding, a minimum length may be set.

Fixed Length: For fixed-length decoding, two different lengths may be set.

★Standard 2 of 5 Length Control = Variable Length

Standard 2 of 5 Length Control = Fixed Length

Standard 2 of 5 Set Length 1

This feature specifies one of the bar code lengths for "Standard 2 of 5 Length Control" on page 168. Length 1 is the minimum label length if in Variable Length Mode, or the first fixed length if in Fixed Length Mode. The length includes the bar code's check and data characters.

The length can be set from 1 to 50 characters. See "Set Length 1" on page 302 for more detailed programming instructions.

Select Standard 2 of 5 Length 1 Setting

To configure this feature, scan the ENTER/EXIT PROGRAMMING MODE bar code above, then the bar code at left followed by the digits from the Alphanumeric characters in Appendix D, Keypad representing your desired character(s). End by scanning the ENTER/EXIT bar code again.

Make a mistake? Scan the CANCEL bar code to abort and not save the entry string. You can then start again at the beginning.

CANCEL

★Length 1 = 08 (8 characters)

Standard 2 of 5 Set Length 2

This feature specifies one of the bar code lengths for "Standard 2 of 5 Length Control" on page 168. Length 2 is the maximum label length if in Variable Length Mode, or the second fixed length if in Fixed Length Mode. The length includes the bar code's check and data characters.

The length can be set from 1 to 50 characters. A setting of 00 specifies to ignore this length (only one fixed length). See "Set Length 2" on page 303 for more detailed programming instructions.

Select Standard 2 of 5 Set Length 2 Setting

To configure this feature, scan the ENTER/EXIT PROGRAMMING MODE bar code above, then the bar code at left followed by the digits from the Alphanumeric characters in Appendix D, Keypad representing your desired character(s). End by scanning the ENTER/EXIT bar code again.

Make a mistake? Scan the CANCEL bar code to abort and not save the entry string. You can then start again at the beginning.

CANCEL

★Length 2 = 50 (50 characters)

COMPRESSED 2 OF 5

The following options apply to the Compressed 2 of 5 symbology.

Compressed 2 of 5 Enable/Disable

When disabled, the reader will not read Compressed 2 of 5 bar codes.

★Compressed 2 of 5 = Disable

Compressed 2 of 5 = Enable

Compressed 2 of 5 Check Character Calculation

This option enables/disables calculation and verification of an optional Compressed 2 of 5 check character.

★Compressed 2 of 5 Check Character Calculation = Disable

Compressed 2 of 5 Check Character Calculation = Enable

Compressed 2 of 5 Check Character Transmission

This feature enables/disables transmission of an optional Compressed 2 of 5 check character.



Compressed 2 of 5 Check Character Transmission = Don't Send



★Compressed 2 of 5 Check Character Transmission = Send

Compressed 2 of 5 Length Control

This feature specifies either variable length decoding or fixed length decoding for the Compressed 2 of 5 symbology.

Variable Length: For variable-length decoding, a minimum length may be set.

Fixed Length: For fixed-length decoding, two different lengths may be set.



★Compressed 2 of 5 Length Control = Variable Length



Compressed 2 of 5 Length Control = Fixed Length

Compressed 2 of 5 Set Length 1

This feature specifies one of the bar code lengths for "Compressed 2 of 5 Length Control" on page 171. Length 1 is the minimum label length if in Variable Length Mode, or the first fixed length if in Fixed Length Mode. The length includes the bar code's check and data characters.

The length can be set from 1 to 50 characters. See "Set Length 1" on page 302 for more detailed programming instructions.

Select Compressed 2 of 5 Length 1 Setting

To configure this feature, scan the ENTER/EXIT PROGRAMMING MODE bar code above, then the bar code at left followed by the digits from the Alphanumeric characters in Appendix D, Keypad representing your desired character(s). End by scanning the ENTER/EXIT bar code again.

Make a mistake? Scan the CANCEL bar code to abort and not save the entry string. You can then start again at the beginning.

CANCEL

★Length 1 = 01 (one character)

Compressed 2 of 5 Set Length 2

This feature specifies one of the bar code lengths for "Compressed 2 of 5 Length Control" on page 171. Length 2 is the maximum label length if in Variable Length Mode, or the second fixed length if in Fixed Length Mode. The length includes the bar code's check and data characters.

The length can be set from 1 to 50 characters. A setting of 00 specifies to ignore this length (only one fixed length). See "Set Length 2" on page 303 for more detailed programming instructions.

Select Compressed 2 of 5 Set Length 2 Setting

To configure this feature, scan the ENTER/EXIT PROGRAMMING MODE bar code above, then the bar code at left followed by the digits from the Alphanumeric characters in Appendix D, Keypad representing your desired character(s). End by scanning the ENTER/EXIT bar code again.

Make a mistake? Scan the CANCEL bar code to abort and not save the entry string. You can then start again at the beginning.

CANCEL

★Length 2 = 50 (50 characters)

DATALOGIC 2 OF 5

The following options apply to the Datalogic 2 of 5 symbology.

Datalogic 2 of 5 Enable/Disable

When disabled, the reader will not read Datalogic 2 of 5 bar codes.



★Datalogic 2 of 5 = Disable



Datalogic 2 of 5 = Enable

Datalogic 2 of 5 Check Character Calculation

This option enables/disables calculation and verification of an optional Datalogic 2 of 5 check character.



★Datalogic 2 of 5 Check Character Calculation = Disable



Datalogic 2 of 5 Check Character Calculation = Enable

Datalogic 2 of 5 Check Character Transmission

Enable this option to transmit the check character along with Datalogic 2 of 5 bar code data.



Datalogic 2 of 5 Check Character Transmission
= Don't Send



★Datalogic 2 of 5 Check Character Transmission
= Send

Datalogic 2 of 5 Length Control

This feature specifies either variable length decoding or fixed length decoding for the Datalogic 2 of 5 symbology.

Variable Length: For variable-length decoding, a minimum length may be set.

Fixed Length: For fixed-length decoding, two different lengths may be set.



★Datalogic 2 of 5 Length Control = Variable Length



Datalogic 2 of 5 Length Control = Fixed Length

Datalogic 2 of 5 Set Length 1

This feature specifies one of the bar code lengths for "Datalogic 2 of 5 Length Control" on page 174. Length 1 is the minimum label length if in Variable Length Mode, or the first fixed length if in Fixed Length Mode. The length includes the bar code's check and data characters. The length can be set from 2 to 50 characters in increments of two. See "Set Length 1" on page 302 for more detailed programming instructions.

Select Datalogic 2 of 5 Length 1 Setting

To configure this feature, scan the ENTER/EXIT PROGRAMMING MODE bar code above, then the bar code at left followed by the digits from the Alphanumeric characters in Appendix D, Keypad representing your desired character(s). End by scanning the ENTER/EXIT bar code again.

Make a mistake? Scan the CANCEL bar code to abort and not save the entry string. You can then start again at the beginning.

CANCEL

★Length 1 = 06 (6 characters)

Datalogic 2 of 5 Set Length 2

This feature specifies one of the bar code lengths for "Datalogic 2 of 5 Length Control" on page 174. Length 2 is the maximum label length if in Variable Length Mode, or the second fixed length if in Fixed Length Mode. The length includes the bar code's check and data characters. The length can be set from 2 to 50 characters. A setting of 00 specifies to ignore this length (only one fixed length). See "Set Length 2" on page 303 for more detailed programming instructions.

Select Datalogic 2 of 5 Set Length 2 Setting

To configure this feature, scan the ENTER/EXIT PROGRAMMING MODE bar code above, then the bar code at left followed by the digits from the Alphanumeric characters in Appendix D, Keypad representing your desired character(s). End by scanning the ENTER/EXIT bar code again.

Make a mistake? Scan the CANCEL bar code to abort and not save the entry string. You can then start again at the beginning.

CANCEL

★Length 2 = 50 (50 characters)

INDUSTRIAL 2 OF 5

The following options apply to the Industrial 2 of 5 symbology.

Industrial 2 of 5 Enable/Disable

When disabled, the reader will not read Industrial 2 of 5 bar codes.



★Industrial 2 of 5 = Disable



Industrial 2 of 5 = Enable

Industrial 2 of 5 Check Character Calculation

Enables/Disables calculation and verification of an optional Industrial 2 of 5 check character.



★Industrial 2 of 5 Check Character Calculation = Disable



Industrial 2 of 5 Check Character Calculation = Enable

Industrial 2 of 5 Check Character Transmission

Enables/disables transmission of an Industrial 2 of 5 check character.



Industrial 2 of 5 Check Character Transmission
= Don't Send



★Industrial 2 of 5 Check Character Transmission
= Send

Industrial 2 of 5 Length Control

This feature specifies either variable length decoding or fixed length decoding for the Industrial 2 of 5 symbology.

Variable Length: For variable-length decoding, a minimum length may be set.

Fixed Length: For fixed-length decoding, two different lengths may be set.



★Industrial 2 of 5 Length Control = Variable Length



Industrial 2 of 5 Length Control = Fixed Length

Industrial 2 of 5 Set Length 1

This feature specifies one of the bar code lengths for "Industrial 2 of 5 Length Control" on page 177. Length 1 is the minimum label length if in Variable Length Mode, or the first fixed length if in Fixed Length Mode. The length includes the bar code's check and data characters.

The length can be set from 1 to 50 characters. See "Set Length 1" on page 302 for more detailed programming instructions.

Select Industrial 2 of 5 Length 1 Setting

To configure this feature, scan the ENTER/EXIT PROGRAMMING MODE bar code above, then the bar code at left followed by the digits from the Alphanumeric characters in Appendix D, Keypad representing your desired character(s). End by scanning the ENTER/EXIT bar code again.

Make a mistake? Scan the CANCEL bar code to abort and not save the entry string. You can then start again at the beginning.

CANCEL

★Length 1 = 06 (6 characters)

Industrial 2 of 5 Set Length 2

This feature specifies one of the bar code lengths for "Industrial 2 of 5 Length Control" on page 177. Length 2 is the maximum label length if in Variable Length Mode, or the second fixed length if in Fixed Length Mode. The length includes the bar code's check and data characters.

The length can be set from 1 to 50 characters. A setting of 00 specifies to ignore this length (only one fixed length). See "Set Length 2" on page 303 for more detailed programming instructions.

Select Industrial 2 of 5 Set Length 2 Setting

To configure this feature, scan the ENTER/EXIT PROGRAMMING MODE bar code above, then the bar code at left followed by the digits from the Alphanumeric characters in Appendix D, Keypad representing your desired character(s). End by scanning the ENTER/EXIT bar code again.

Make a mistake? Scan the CANCEL bar code to abort and not save the entry string. You can then start again at the beginning.

CANCEL

★Length 2 = 50 (50 characters)

IATA

The following options apply to the IATA symbology.

IATA Enable/Disable

Enables/Disables the ability of the reader to decode IATA labels.



★IATA = Disable



IATA = Enable

IATA Check Character Transmission

Enables/Disables calculation and verification of an optional IATA check character.



IATA Check Character Transmission = Don't Send



★IATA Check Character Transmission = Send

FOLLETT 2 OF 5

The following options apply to the Follett 2 of 5 symbology.

Follett 2 of 5 Enable/Disable

Enables/Disables ability of reader to decode Follett 2 of 5 labels.

★Follett 2 of 5 = Disable

Follett 2 of 5 = Enable

CODABAR

The following options apply to the Codabar symbology.

Codabar Enable/Disable

When disabled, the reader will not read Codabar bar codes.



Codabar = Disable



★Codabar = Enable

Codabar Check Character Calculation

This option enables/disables calculation and verification of an optional Codabar check character. When disabled, any check characters in the label are treated as data characters.



★Codabar Check Character Calculation = Disable



Codabar Check Character Calculation
= Calculate AIM Std Check



Codabar Check Character Calculation
= Calculate Modulo 10 Check



Codabar Check Character Calculation
= Calculate NW-7 Check

Codabar Check Character Transmission

Enable this option to transmit the check character along with Codabar bar code data.

NOTE: This feature is valid only when Codabar Check Character Calculation is enabled.

Codabar Check Character Transmission
= Don't Send

★Codabar Check Character Transmission
= Send

Codabar Start/Stop Character Transmission

This option enables/disables transmission of Codabar start and stop characters.

Codabar Start/Stop Character Transmission
= Don't Transmit

★Codabar Start/Stop Character Transmission
= Transmit

Codabar Start/Stop Character Set

This option specifies the format of transmitted Codabar start/stop characters.



Codabar Check Character Set = ABCD/TN*E



Codabar Check Character Set = ABCD/ABCD



Codabar Check Character Set = abcd/tn*e



★Codabar Check Character Set = abcd/abcd

Codabar Start/Stop Character Match

When enabled, this option requires that start and stop characters match



★Codabar Start/Stop Character Match = Don't Require Match



Codabar Start/Stop Character Match = Require Match

Codabar Quiet Zones

This feature specifies the number of quiet zones for Codabar labels. Quiet zones are blank areas at the ends of a bar code and are typically 10 times the width of the narrowest bar or space in the label.

Codabar Quiet Zones = Quiet Zone on one side

★Codabar Quiet Zones = disable

Codabar Length Control

This feature specifies either variable length decoding or fixed length decoding for the Codabar symbology.

Variable Length: For variable-length decoding, a minimum length may be set.

Fixed Length: For fixed-length decoding, two different lengths may be set.



★Codabar Length Control = Variable Length



Codabar Length Control = Fixed Length

Codabar Set Length 1

This feature specifies one of the bar code lengths for "Codabar Length Control" on page 185. Length 1 is the minimum label length if in Variable Length Mode, or the first fixed length if in Fixed Length Mode. Length includes the bar code's start, stop, check and data characters. The length must include at least one data character.

The length can be set from 3 to 50 characters. See "Set Length 1" on page 302 for more detailed programming instructions.



Select Codabar Length 1 Setting

To configure this feature, scan the ENTER/EXIT PROGRAMMING MODE bar code above, then the bar code at left followed by the digits from the Alphanumeric characters in Appendix D, Keypad representing your desired character(s). End by scanning the ENTER/EXIT bar code again.

Make a mistake? Scan the CANCEL bar code to abort and not save the entry string. You can then start again at the beginning.



CANCEL

★Length 1 = 05 (3 characters)

Codabar Set Length 2

This feature specifies one of the bar code lengths for "Codabar Length Control" on page 185. Length 2 is the maximum label length if in Variable Length Mode, or the second fixed length if in Fixed Length Mode. The length includes the bar code's start, stop, check and data characters. The length must include at least one data character.

The length can be set from 3 to 50 characters. A setting of 00 specifies to ignore this length (only one fixed length). See "Set Length 2" on page 303 for more detailed programming instructions.

Select Codabar Length 2 Setting

To configure this feature, scan the ENTER/EXIT PROGRAMMING MODE bar code above, then the bar code at left followed by the digits from the Alphanumeric characters in Appendix D, Keypad representing your desired character(s). End by scanning the ENTER/EXIT bar code again.

Make a mistake? Scan the CANCEL bar code to abort and not save the entry string. You can then start again at the beginning.

CANCEL

★Length 2 = 50 (50 characters)

ABC CODABAR

The following options apply to the ABC Codabar symbology.

ABC Codabar Enable/Disable

Enables/Disables ability of reader to decode ABC Codabar labels.

★ABC Codabar = Disable

ABC Codabar = Enable

ABC Codabar Concatenation Mode

Specifies the concatenation mode between Static and Dynamic.

★ABC Codabar Contatenation Mode = Static

ABC Codabar Concatenation Mode = Dynamic

ABC Codabar Dynamic Concatenation Timeout

This parameter specifies the timeout in 10-millisecond ticks used by the ABC Codabar Dynamic Concatenation Mode. The timeout can be set within a range of 05 to 255 in 10ms increments. A setting of zero specifies no delay.

Select ABC Codabar Dynamic Concatenation Timeout Setting

To configure this feature, scan the ENTER/EXIT PROGRAMMING MODE bar code above, then the bar code at left followed by the digits from the Alphanumeric characters in Appendix D, Keypad representing your desired character(s). End by scanning the ENTER/EXIT bar code again.

Make a mistake? Scan the CANCEL bar code to abort and not save the entry string. You can then start again at the beginning.

CANCEL

★Timeout = 20 (200 msec)

ABC Codabar Force Concatenation

When ABC Codabar Concatenation is enabled and Force Concatenation is disabled, both Codabar stand alone labels and ABC Codabar concatenated labels are transmitted. When ABC Codabar Concatenation is enabled and Force Concatenation is enabled only ABC Codabar concatenated labels are transmitted while Codabar stand alone labels are not transmitted.

Force Concatenation has no effect if the ABC Codabar Concatenation is disabled. The Force Concatenation mode has effect both in Static and Dynamic Concatenation Modes.

★ABC Codabar Force Contatenation = Disable

ABC Codabar Force Concatenation = Enable

ISBT 128

The following options apply to the ISBT 128 symbology.

ISBT 128 Concatenation

Enables/disables ISBT 128 concatenation of 2 labels.

★ISBT 128 Concatenation = Disable

ISBT 128 Concatenation = Enable

ISBT 128 Concatenation Mode

Specifies the concatenation mode between Static and Dynamic.

★ISBT 128 Contatenation Mode = Static

ISBT 128 Concatenation Mode = Dynamic

ISBT 128 Dynamic Concatenation Timeout

Specifies the timeout used by the ISBT 128 Dynamic Concatenation Mode.



ISBT 128 Dynamic Concatenation Timeout = 50 msec



ISBT 128 Dynamic Concatenation Timeout = 100 msec



★ISBT 128 Dynamic Concatenation Timeout = 200 msec



ISBT 128 Dynamic Concatenation Timeout = 500 msec



ISBT 128 Dynamic Concatenation Timeout = 750 msec



ISBT 128 Dynamic Concatenation Timeout = 1 second

ISBT 128 Force Concatenation

When enabled, this feature forces all ISBT 128 labels to be concatenated.

NOTE: This option is only valid when "ISBT 128 Concatenation" on page 189 is enabled.

★ISBT 128 Force Contatenation = Disable

ISBT 128 Force Concatenation = Enable

ISBT 128 Advanced Concatenation Options

NOTE: Use the Datalogic Aladdin configuration application or Contact Customer Support to set up pairs of label types for concatenation.

CODE 11

The following options apply to the Code 11 symbology.

Code 11 Enable/Disable

When disabled, the reader will not read Code 11 bar codes.



★Code 11 = Disable



Code 11 = Enable

Code 11 Check Character Calculation

This option enables/disables calculation and verification of optional Code 11 check character.



Code 11 Check Character Calculation = Disable



Code 11 Check Character Calculation = Calculate Check C



Code 11 Check Character Calculation
= Calculate Check K



★Code 11 Check Character Calculation
= Calculate Check C and K

Code 11 Check Character Transmission

This feature enables/disables transmission of an optional Code 11 check character.



Code 11 Check Character Transmission = Don't Send



★Code 11 Check Character Transmission = Send

Code 11 Length Control

This feature specifies either variable length decoding or fixed length decoding for the Code 11 symbology.

Variable Length: For variable-length decoding, a minimum length may be set.

Fixed Length: For fixed-length decoding, two different lengths may be set.



★Code 11 Length Control = Variable Length



Code 11 Length Control = Fixed Length

Code 11 Set Length 1

This feature specifies one of the bar code lengths for "Code 11 Length Control" on page 193. Length 1 is the minimum label length if in Variable Length Mode, or the first fixed length if in Fixed Length Mode. Length includes the bar code's check and data characters.

The length can be set from 2 to 50 characters. See "Set Length 1" on page 302 for more detailed programming instructions.

Select Code 11 Length 1 Setting

To configure this feature, scan the ENTER/EXIT PROGRAMMING MODE bar code above, then the bar code at left followed by the digits from the Alphanumeric characters in Appendix D, Keypad representing your desired character(s). End by scanning the ENTER/EXIT bar code again.

Make a mistake? Scan the CANCEL bar code to abort and not save the entry string. You can then start again at the beginning.

CANCEL

★Length 1 = 04 (4 characters)

Code 11 Set Length 2

This feature specifies one of the bar code lengths for "Code 11 Length Control" on page 193. Length 2 is the maximum label length if in Variable Length Mode, or the second fixed length if in Fixed Length Mode. Length includes the bar code's check and data characters.

The length can be set from 2 to 50 characters. A setting of 00 specifies to ignore this length (only one fixed length). See "Set Length 2" on page 303 for more detailed programming instructions.

Select Code 11 Length 2 Setting

To configure this feature, scan the ENTER/EXIT PROGRAMMING MODE bar code above, then the bar code at left followed by the digits from the Alphanumeric characters in Appendix D, Keypad representing your desired character(s). End by scanning the ENTER/EXIT bar code again.

Make a mistake? Scan the CANCEL bar code to abort and not save the entry string. You can then start again at the beginning.

CANCEL

★Length 2 = 50 (50 characters)

CODE 93

The following options apply to the Code 93 symbology.

Code 93 Enable/Disable

Enables/Disables ability of reader to decode Code 93 labels.



Code 93 = Disable



★Code 93 = Enable

Code 93 Check Character Calculation

This option enables/disables calculation and verification of optional Code 93 check character.



Code 93 Check Character Calculation = Disable



Code 93 Check Character Calculation = Calculate Check C



Code 93 Check Character Calculation
= Calculate Check K



★Code 93 Check Character Calculation
= Calculate Check C and K

Code 93 Check Character Transmission

This feature enables/disables transmission of an optional Code 93 check character.

★Code 93 Check Character Transmission = Don't Send

Code 93 Check Character Transmission = Send

Code 93 Length Control

This feature specifies either variable length decoding or fixed length decoding for the Code 93 symbology.

Variable Length: For variable-length decoding, a minimum length may be set.

Fixed Length: For fixed-length decoding, two different lengths may be set.

★Code 93 Length Control = Variable Length

Code 93 Length Control = Fixed Length

Code 93 Set Length 1

This feature specifies one of the bar code lengths for "Code 93 Length Control" on page 196. Length 1 is the minimum label length if in Variable Length Mode, or the first fixed length if in Fixed Length Mode. Length includes the bar code's check and data characters.

The length can be set from 1 to 50 characters. See "Set Length 1" on page 302 for more detailed programming instructions.

Select Code 93 Length 1 Setting

To configure this feature, scan the ENTER/EXIT PROGRAMMING MODE bar code above, then the bar code at left followed by the digits from the Alphanumeric characters in Appendix D, Keypad representing your desired character(s). End by scanning the ENTER/EXIT bar code again.

Make a mistake? Scan the CANCEL bar code to abort and not save the entry string. You can then start again at the beginning.

CANCEL

★Length 1 = 01 (one character)

Code 93 Set Length 2

This feature specifies one of the bar code lengths for "Code 93 Length Control" on page 196. Length 2 is the maximum label length if in Variable Length Mode, or the second fixed length if in Fixed Length Mode. The length includes the bar code's check and data characters.

The length can be set from 1 to 50 characters. A setting of 00 specifies to ignore this length (only one fixed length). See "Set Length 2" on page 303 for more detailed programming instructions.

Select Code 93 Length 2 Setting

To configure this feature, scan the ENTER/EXIT PROGRAMMING MODE bar code above, then the bar code at left followed by the digits from the Alphanumeric characters in Appendix D, Keypad representing your desired character(s). End by scanning the ENTER/EXIT bar code again.

Make a mistake? Scan the CANCEL bar code to abort and not save the entry string. You can then start again at the beginning.

CANCEL

★Length 2 = 50 (50 characters)

Code 93 Quiet Zones

This feature specifies the number of quiet zones for Code 93 labels. Quiet zones are blank areas at the ends of a bar code and are typically 10 times the width of the narrowest bar or space in the label.

★Code 93 Quiet Zones = Enable

Code 93 Quiet Zones = Disable

MSI

The following options apply to the MSI symbology.

MSI Enable/Disable

Enables/Disables ability of reader to decode MSI labels.

★MSI = Disable

MSI = Enable

MSI Check Character Calculation

Enables/Disables calculation and verification of an optional MSI check character.

MSI Check Character Calculation = Disable

★MSI Check Character Calculation = Calculate Mod 10

MSI Check Character Calculation
= Calculate Mod 11/10

MSI Check Character Calculation
= Calculate Mod 10/10

MSI Check Character Transmission

Enables/disables transmission of an MSI check character.

MSI Check Character Transmission = Don't Send

★MSI Check Character Transmission = Send

MSI Length Control

This feature specifies either variable length decoding or fixed length decoding for the MSI symbology.

Variable Length: For variable-length decoding, a minimum length may be set.

Fixed Length: For fixed-length decoding, two different lengths may be set.

★MSI Length Control = Variable Length

MSI Length Control = Fixed Length

MSI Set Length 1

This feature specifies one of the bar code lengths for "MSI Length Control" on page 200. Length 1 is the minimum label length if in Variable Length Mode, or the first fixed length if in Fixed Length Mode. Length includes the bar code's data characters only.

The length can be set from 1 to 50 characters. See "Set Length 1" on page 302 for more detailed programming instructions.

Select MSI Length 1 Setting

To configure this feature, scan the ENTER/EXIT PROGRAMMING MODE bar code above, then the bar code at left followed by the digits from the Alphanumeric characters in Appendix D, Keypad representing your desired character(s). End by scanning the ENTER/EXIT bar code again.

Make a mistake? Scan the CANCEL bar code to abort and not save the entry string. You can then start again at the beginning.

CANCEL

★Length 1 = 01 (one character)

MSI Set Length 2

This feature specifies one of the bar code lengths for "MSI Length Control" on page 200. Length 2 is the maximum label length if in Variable Length Mode, or the second fixed length if in Fixed Length Mode. The length includes the bar code's data characters only.

The length can be set from 1 to 50 characters. A setting of 00 specifies to ignore this length (only one fixed length). See "Set Length 2" on page 303 for more detailed programming instructions.

Select MSI Length 2 Setting

To configure this feature, scan the ENTER/EXIT PROGRAMMING MODE bar code above, then the bar code at left followed by the digits from the Alphanumeric characters in Appendix D, Keypad representing your desired character(s). End by scanning the ENTER/EXIT bar code again.

Make a mistake? Scan the CANCEL bar code to abort and not save the entry string. You can then start again at the beginning.

CANCEL

★Length 2 = 50 (50 characters)

PHARMACODE

The following options apply to the Pharmacode symbology.

Pharmacode Enable/Disable

Enables/Disables the ability of the reader to decode Pharmacode labels.

★Pharmacode = Disable

Pharmacode = Enable

Pharmacode Label Direction

This feature specifies the direction in which labels are decoded.

★Pharmacode Label Direction=
Horizontal left to right

Pharmacode Label Direction =
Horizontal right to left

Pharmacode Label Direction =
Vertical top down

Pharmacode Label Direction =
Vertical bottom up

Pharmacode Length Control

This feature specifies either variable length decoding or fixed length decoding for the Pharmacode symbology.

Variable Length: For variable-length decoding, a minimum length may be set.

Fixed Length: For fixed-length decoding, two different lengths may be set.



★Pharmacode Length Control = Variable Length



Pharmacode Length Control = Fixed Length

Pharmacode Set Length 1

This feature specifies one of the bar code lengths for "Pharmacode Length Control" on page 203. Length 1 is the minimum label length if in Variable Length Mode, or the first fixed length if in Fixed Length Mode. The length includes the bar code's check and data characters.

The length can be set from 2 to 6 characters. See "Set Length 1" on page 302 for more detailed programming instructions.



Select Pharmacode Length 1 Setting

To configure this feature, scan the ENTER/EXIT PROGRAMMING MODE bar code above, then the bar code at left followed by the digits from the Alphanumeric characters in Appendix D, Keypad representing your desired character(s). End by scanning the ENTER/EXIT bar code again.

Make a mistake? Scan the CANCEL bar code to abort and not save the entry string. You can then start again at the beginning.



CANCEL

★Length 1 = 02 (two characters)

Pharmacode Set Length 2

This feature specifies one of the bar code lengths for "Pharmacode Set Length 2" on page 204. Length 2 is the maximum label length if in Variable Length Mode, or the second fixed length if in Fixed Length Mode. The length includes the bar code's check and data characters.

Length can be set from 2 to 6 characters. A setting of 00 specifies to ignore this length (only one fixed length). See "Set Length 2" on page 303 for more detailed programming instructions.

Select Pharmacode Length 2 Setting

To configure this feature, scan the ENTER/EXIT PROGRAMMING MODE bar code above, then the bar code at left followed by the digits from the Alphanumeric characters in Appendix D, Keypad representing your desired character(s). End by scanning the ENTER/EXIT bar code again.

Make a mistake? Scan the CANCEL bar code to abort and not save the entry string. You can then start again at the beginning.

CANCEL

★Length 2 = 6 (six characters)

PLESSEY

The following options apply to the Plessey symbology.

Plessey Enable/Disable

Enables/Disables the ability of the reader to decode Plessey labels.



★Plessey = Disable



Plessey = Enable

Plessey Check Character Calculation

Enables/Disables calculation and verification of a Plessey check character.



Plessey Check Character Calculation = Disable



★Plessey Check Character Calculation
= Plessey std check char. verification



Plessey Check Character Calculation
= Anker check char. verification



Plessey Check Character Calculation
= Plessey std and Anker check char. verification

Plessey Check Character Transmission

Enables/disables transmission of a Plessey check character.

Plessey Check Character Transmission = Don't Send

★Plessey Check Character Transmission = Send

Plessey Length Control

This feature specifies either variable length decoding or fixed length decoding for the Plessey symbology.

Variable Length: For variable-length decoding, a minimum length may be set.

Fixed Length: For fixed-length decoding, two different lengths may be set.

★Plessey Length Control = Variable Length

Plessey Length Control = Fixed Length

Plessey Set Length 1

This feature specifies one of the bar code lengths for "Plessey Length Control" on page 206. Length 1 is the minimum label length if in Variable Length Mode, or the first fixed length if in Fixed Length Mode. The length includes the bar code's check and data characters.

The length can be set from 1 to 50 characters. See "Set Length 1" on page 302 for more detailed programming instructions.

Select Plessey Length 1 Setting

To configure this feature, scan the ENTER/EXIT PROGRAMMING MODE bar code above, then the bar code at left followed by the digits from the Alphanumeric characters in Appendix D, Keypad representing your desired character(s). End by scanning the ENTER/EXIT bar code again.

Make a mistake? Scan the CANCEL bar code to abort and not save the entry string. You can then start again at the beginning.

CANCEL

★Length 1 = 01 (one character)

Plessey Set Length 2

This feature specifies one of the bar code lengths for "Plessey Length Control" on page 206. Length 2 is the maximum label length if in Variable Length Mode, or the second fixed length if in Fixed Length Mode. The length includes the bar code's check and data characters.

Length can be set from 1 to 50 characters. A setting of 00 specifies to ignore this length (only one fixed length). See "Set Length 2" on page 303 for more detailed programming instructions.

Select Plessey Length 2 Setting

To configure this feature, scan the ENTER/EXIT PROGRAMMING MODE bar code above, then the bar code at left followed by the digits from the Alphanumeric characters in Appendix D, Keypad representing your desired character(s). End by scanning the ENTER/EXIT bar code again.

Make a mistake? Scan the CANCEL bar code to abort and not save the entry string. You can then start again at the beginning.

CANCEL

★Length 2 = 50 (50 characters)

BC412

The following options apply to the BC412 symbology.

BC412 Enable/Disable

Enables/Disables ability of reader to decode BC412 labels.



★BC412 = Disable



BC412 = Enable

BC412 Check Character Calculation

Enable this option to enable/disable calculation and verification of an optional BC412 check character. When disabled, any check character in the label is treated as a data character.



BC412 Check Character Calculation = Disable



★BC412 Check Character Calculation = Calculate

BC412 Length Control

This feature specifies either variable length decoding or fixed length decoding for the BC412 symbology.

Variable Length: For variable-length decoding, a minimum length may be set.

Fixed Length: For fixed-length decoding, two different lengths may be set.

★BC412 Length Control = Variable Length

BC412 Length Control = Fixed Length

BC412 Set Length 1

This feature specifies one of the bar code lengths for "BC412 Length Control" on page 209. Length 1 is the minimum label length if in Variable Length Mode, or the first fixed length if in Fixed Length Mode. Length includes the bar code's data characters only.

The length can be set from 01 to 50 characters. See "Set Length 1" on page 302 for more detailed programming instructions.

Select BC412 Length 1 Setting

To configure this feature, scan the ENTER/EXIT PROGRAMMING MODE bar code above, then the bar code at left followed by the digits from the Alphanumeric characters in Appendix D, Keypad representing your desired character(s). End by scanning the ENTER/EXIT bar code again.

Make a mistake? Scan the CANCEL bar code to abort and not save the entry string. You can then start again at the beginning.

CANCEL

★Length 1 = 01 (one character)

BC412 Set Length 2

This feature specifies one of the bar code lengths for "BC412 Length Control" on page 209. Length 2 is the maximum label length if in Variable Length Mode, or the second fixed length if in Fixed Length Mode. Length includes the bar code's data characters only.

The length can be set from 01 to 50 characters. A setting of 00 specifies to ignore this length (only one fixed length). See "Set Length 2" on page 303 for more detailed programming instructions.

Select BC412 Length 2 Setting

To configure this feature, scan the ENTER/EXIT PROGRAMMING MODE bar code above, then the bar code at left followed by the digits from the Alphanumeric characters in Appendix D, Keypad representing your desired character(s). End by scanning the ENTER/EXIT bar code again.

Make a mistake? Scan the CANCEL bar code to abort and not save the entry string. You can then start again at the beginning.

CANCEL

★Length 2 = 50 (50 characters)

CONFIGURATION | 2D SYMBOLOGIES

SECTION CONTENTS

2DTABLE ON PAGE 237 GLOBAL FEATURES starting on page 212

AZTEC CODE starting on page 214

CHINA SENSIBLE CODE starting on page 216

DATA MATRIX starting on page 218

GS1 DOTCODE starting on page 221

MAXICODE starting on page 223

PDF417 starting on page 226

MICRO PDF417 starting on page 229

QR CODE starting on page 232

MICRO QR CODE starting on page 235

GS1 DIGITAL LINK starting on page 237

UCC COMPOSITE starting on page 241

The reader supports the following 2D symbologies (bar code types). Symbology-dependent options for each symbology are included in this chapter. See 1D Symbologies, starting on page 121 for configuration of 1D bar codes.

2DTABLE ON PAGE 237 GLOBAL FEATURES

The following features are common to all, or in some cases, most of the available 2D symbologies. Default settings are indicated at each feature/option with a green arrow. Also reference Appendix B, Standard Defaults for a listing of the most widely used set of standard factory settings. That section also provides space to record any custom settings needed or implemented for your system.

To set most features:

1. Scan the ENTER/EXIT PROGRAMMING bar code at the top of applicable programming pages.
2. Scan the correct bar code to set the desired programming feature or parameter. You may need to cover unused bar codes on the page, and possibly the facing page, to ensure that the reader reads only the bar code you intend to scan.
3. If additional input parameters are needed, go to Appendix D, Keypad, and scan the appropriate characters from the keypad.



NOTE: Additional information about many features can be found in the "References" chapter.

If you make a mistake before the last character, scan the CANCEL bar code to abort and not save the entry string. You can then start again at the beginning.

Complete the programming sequence by scanning the ENTER/EXIT PROGRAMMING bar code to exit Programming Mode.

2D Structured Append

Enables/disables ability of reader to append multiple 2D Codes labels in a structured format. The structured append property is globally applied to the following symbologies, if these are enabled:

- Data Matrix
- Aztec
- QR Code
- PDF 417



★Structured Append = Disable



Structured Append = Enable

2D Normal/Inverse Symbol Control

Specifies the options available for decoding normal/negative printed 2D symbols. This configuration item applies globally to all the 2D symbologies that support that feature according to Standard AIM Specification: Data Matrix, QR, MicroQR, Aztec and Chinese Sensible Code.



Normal/Inverse Symbol Control = Normal



Normal/Inverse Symbol Control = Inverse



★Normal/Inverse Symbol Control =Both Normal and Inverse

AZTEC CODE

Aztec Code Enable / Disable

Enables/disables the ability of the reader to decode Aztec Code labels.



Aztec Code = Disable



★Aztec Code = Enable

Aztec Code Length Control

This feature specifies either variable length decoding or fixed length decoding for this symbology.

Variable Length: For variable length decoding, a minimum and maximum length may be set.

Fixed Length: For fixed length decoding, two different lengths may be set.



★Aztec Code Length Control = Variable Length



Aztec Code Length Control = Fixed Length

Aztec Code Set Length 1

Specifies one of the bar code lengths for "Aztec Code Length Control" on page 214.

Length 1 is the minimum label length if in Variable Length Mode, or the first fixed length if in Fixed Length Mode. Characters can be set from 0001 to 3,832 characters in increments of 0001 (pad with zeroes).

See "Set Length 1" on page 302 for detailed instructions on setting this feature.

Select Aztec Code Length 1 Setting

To configure this feature, scan the ENTER/EXIT PROGRAMMING MODE bar code above, then the bar code at left followed by the digits from the Alphanumeric characters in Appendix D, Keypad representing your desired character(s). End by scanning the ENTER/EXIT bar code again.

Make a mistake? Scan the CANCEL bar code to abort and not save the entry string. You can then start again at the beginning.

CANCEL

★0001 = Length 1 is 1 Character

Aztec Code Set Length 2

Specifies one of the bar code lengths for "Aztec Code Length Control" on page 214.

Length 2 is the minimum label length if in Variable Length Mode, or the first fixed length if in Fixed Length Mode. Characters can be set from 0001 to 3,832 characters in increments of 0001 (pad with zeroes).

See "Set Length 2" on page 303 for detailed instructions on setting this feature.

Select Aztec Code Length 2 Setting

To configure this feature, scan the ENTER/EXIT PROGRAMMING MODE bar code above, then the bar code at left followed by the digits from the Alphanumeric characters in Appendix D, Keypad representing your desired character(s). End by scanning the ENTER/EXIT bar code again.

Make a mistake? Scan the CANCEL bar code to abort and not save the entry string. You can then start again at the beginning.

CANCEL

★Length 2 is 3,832 Characters

CHINA SENSIBLE CODE

China Sensible Code Enable / Disable

Enables/disables the ability of the reader to decode China Sensible Code labels.

★China Sensible Code = Disable

China Sensible Code = Enable

China Sensible Code Length Control

This feature specifies either variable length decoding or fixed length decoding for this symbology.

Variable Length: For variable length decoding, a minimum and maximum length may be set.

Fixed Length: For fixed length decoding, two different lengths may be set.

★China Sensible Code Length Control = Variable Length

China Sensible Code Length Control = Fixed Length

China Sensible Code Set Length 1

Specifies one of the bar code lengths for "China Sensible Code Length Control" on page 216. Length 1 is the minimum label length if in Variable Length Mode, or the first fixed length if in Fixed Length Mode. Characters can be set from 0001 to 7,827 characters in increments of 0001 (pad with zeroes).

See "Set Length 1" on page 302 for detailed instructions on setting this feature.



Select China Sensible Code Length 1 Setting

To configure this feature, scan the ENTER/EXIT PROGRAMMING MODE bar code above, then the bar code at left followed by the digits from the Alphanumeric characters in Appendix D, Keypad representing your desired character(s). End by scanning the ENTER/EXIT bar code again.

Make a mistake? Scan the CANCEL bar code to abort and not save the entry string. You can then start again at the beginning.



CANCEL

★0001 = Length 1 is 1 Character

China Sensible Code Set Length 2

This feature specifies one of the bar code lengths for "China Sensible Code Length Control" on page 216. Length 2 is the maximum label length if in Variable Length Mode, or the second fixed length if in Fixed Length Mode. Characters can be set from 0001 to 7,827 characters in increments of 0001 (pad with zeroes).

See "Set Length 2" on page 303 for detailed instructions on setting this feature.



Select China Sensible Code Length 2 Setting

To configure this feature, scan the ENTER/EXIT PROGRAMMING MODE bar code above, then the bar code at left followed by the digits from the Alphanumeric characters in Appendix D, Keypad representing your desired character(s). End by scanning the ENTER/EXIT bar code again.

Make a mistake? Scan the CANCEL bar code to abort and not save the entry string. You can then start again at the beginning.



CANCEL

★Length 2 is 7,827 Characters

DATA MATRIX

Data Matrix Enable / Disable

Enables/disables ability of reader to decode Data Matrix labels.

Data Matrix = Disable

★Data Matrix = Enable

NOTE: This configuration item impacts both the Standard Data Matrix and GS1 Data Matrix symbologies.

Data Matrix Square/Rectangular Style

Specifies the options available when reading Data Matrix with different form factors. Choices are:

- Square Style
- Rectangular Style
- Both Square and Rectangular Style

The configuration item can also be configured as a bit mask to filter one or more Data Matrix labels with different symbol size AND shape styles.

Data Matrix Dimensions Mask = Square Style

Data Matrix Dimensions Mask = Rectangular Style

★Data Matrix Dimensions Mask = Both Square and Rectangular Style

Data Matrix Length Control

This feature specifies either variable length decoding or fixed length decoding for this symbology.

Variable Length: For variable length decoding, a minimum and maximum length may be set.

Fixed Length: For fixed length decoding, two different lengths may be set.

★Data Matrix Length Control = Variable Length

Data Matrix Length Control = Fixed Length

Data Matrix Set Length 1

This feature specifies one of the bar code lengths for "Data Matrix Length Control" on page 219. Length 1 is the minimum label length if in Variable Length Mode, or the first fixed length if in Fixed Length Mode. Characters can be set from 0001 to 3,116 characters in increments of 0001 (pad with zeroes).

See "Set Length 1" on page 302 for detailed instructions on setting this feature.

Select Data Matrix Length 1 Setting

To configure this feature, scan the ENTER/EXIT PROGRAMMING MODE bar code above, then the bar code at left followed by the digits from the Alphanumeric characters in Appendix D, Keypad representing your desired character(s). End by scanning the ENTER/EXIT bar code again.

Make a mistake? Scan the CANCEL bar code to abort and not save the entry string. You can then start again at the beginning.

CANCEL

★0001 = Length 1 is 1 Character

Data Matrix Set Length 2

This feature specifies one of the bar code lengths for "Data Matrix Length Control" on page 219. Length 2 is the maximum label length if in Variable Length Mode, or the second fixed length if in Fixed Length Mode. Characters can be set from 0001 to 3,116 characters in increments of 0001 (pad with zeroes).

See "Set Length 2" on page 303 for detailed instructions on setting this feature.

Select Data Matrix Length 2 Setting

To configure this feature, scan the ENTER/EXIT PROGRAMMING MODE bar code above, then the bar code at left followed by the digits from the Alphanumeric characters in Appendix D, Keypad representing your desired character(s). End by scanning the ENTER/EXIT bar code again.

Make a mistake? Scan the CANCEL bar code to abort and not save the entry string. You can then start again at the beginning.

CANCEL

★Length 2 is 3,116 Characters

GS1 DOTCODE

The following options apply for the DotCode barcode decoding

DotCode Enable

This options enables/disables the ability of the reader to decode DotCode barcodes.



DotCode = Enable



★DotCode = Disable

DotCode High Resolution Enable

This options improves the decoding performance for very small module size barcodes, e.g. tobacco products.



★DotCode High Resolution = Enable



DotCode High Resolution = Disable

DotCode Position-based Decoding

This option can improve the decoding performance when the next barcode to be decoded is approximately shown in the same position as the previous one.



DotCode Position-based Decoding = Enable



★DotCode Position-based Decoding = Disable

Additional Options

To improve performances the following additional settings are available using Aladdin configuration utility, downloadable from www.datalogic.com.

- Dot Size
- Fixed Length or Variable Length
- Min and Max barcode size

MAXICODE

Maxicode Enable / Disable

Enables/disables ability of reader to decode Maxicode labels.

★Maxicode = Disable

Maxicode = Enable

Maxicode Length Control

This feature specifies either variable length decoding or fixed length decoding for this symbology.

Variable Length: For variable length decoding, a minimum and maximum length may be set.

Fixed Length: For fixed length decoding, two different lengths may be set.

★Maxicode Length Control = Variable Length

Maxicode Length Control = Fixed Length

Maxicode Set Length 1

Specifies one of the bar code lengths for "Maxicode Length Control" on page 223. Length 1 is the minimum label length if in Variable Length Mode, or the first fixed length if in Fixed Length Mode. Characters can be set from 0001 to 0145 characters in increments of 0001 (pad with zeroes).

See "Set Length 1" on page 302 for detailed instructions on setting this feature.

Select Maxicode Length 1 Setting

To configure this feature, scan the ENTER/EXIT PROGRAMMING MODE bar code above, then the bar code at left followed by the digits from the Alphanumeric characters in Appendix D, Keypad representing your desired character(s). End by scanning the ENTER/EXIT bar code again.

Make a mistake? Scan the CANCEL bar code to abort and not save the entry string. You can then start again at the beginning.

CANCEL

★0001 = Length 1 is 1 Character

Maxicode Set Length 2

This feature specifies one of the bar code lengths for "Maxicode Length Control" on page 223. Length 2 is the maximum label length if in Variable Length Mode, or the second fixed length if in Fixed Length Mode. Characters can be set from 0001 to 0145 characters in increments of 0001 (pad with zeroes).

See "Set Length 2" on page 303 for detailed instructions on setting this feature.

Select Maxicode Length 2 Setting

To configure this feature, scan the ENTER/EXIT PROGRAMMING MODE bar code above, then the bar code at left followed by the digits from the Alphanumeric characters in Appendix D, Keypad representing your desired character(s). End by scanning the ENTER/EXIT bar code again.

Make a mistake? Scan the CANCEL bar code to abort and not save the entry string. You can then start again at the beginning.

CANCEL

★Length 2 is 0145 Characters

PDF417

PDF417 Enable / Disable

Enables/disables the ability of the reader to decode PDF417 labels.

PDF417 = Disable

★PDF417 = Enable

PDF417 Length Control

This feature specifies either variable length decoding or fixed length decoding for this symbology.

Variable Length: For variable length decoding, a minimum and maximum length may be set.

Fixed Length: For fixed length decoding, two different lengths may be set.

★PDF417 Length Control = Variable Length

PDF417 Length Control = Fixed Length

PDF417 Set Length 1

Specifies one of the bar code lengths for "PDF417 Length Control" on page 226. Length 1 is the minimum label length if in Variable Length Mode, or the first fixed length if in Fixed Length Mode. Length includes the bar code's data characters only. Characters can be set from 0001 to 2,710 characters (pad with zeroes) in increments of 01. Any value greater than 2,710 will be considered to be 2,710.

See"Set Length 1" on page 302 for detailed instructions on setting this feature.

Select PDF417 Length 1 Setting

To configure this feature, scan the ENTER/EXIT PROGRAMMING MODE bar code above, then the bar code at left followed by the digits from the Alphanumeric characters in Appendix D, Keypad representing your desired character(s). End by scanning the ENTER/EXIT bar code again.

Make a mistake? Scan the CANCEL bar code to abort and not save the entry string. You can then start again at the beginning.

CANCEL

★0001 = Length 1 is 1 Character

PDF417 Set Length 2

This feature specifies one of the bar code lengths for "PDF417 Length Control" on page 226. Length 2 is the maximum label length if in Variable Length Mode, or the second fixed length if in Fixed Length Mode. Length includes the bar code's check, data, and full-ASCII shift characters. The length does not include start/stop characters. Characters can be set from 01 to 2,710 characters (pad with zeroes) in increments of 01. Any value greater than 2,710 will be considered to be 2,710.

See "Set Length 2" on page 303 for detailed instructions on setting this feature.

Select PDF417 Length 2 Setting

To configure this feature, scan the ENTER/EXIT PROGRAMMING MODE bar code above, then the bar code at left followed by the digits from the Alphanumeric characters in Appendix D, Keypad representing your desired character(s). End by scanning the ENTER/EXIT bar code again.

Make a mistake? Scan the CANCEL bar code to abort and not save the entry string. You can then start again at the beginning.

CANCEL

★Length 2 is 2,710 Characters

MICRO PDF417

Micro PDF417 Enable / Disable

Enables/disables the ability of the reader to decode Micro PDF417 labels.



★Micro PDF417 = Disable



Micro PDF417 = Enable

Micro PDF417 Code 128 GS1-128 Emulation

Specifies which AIM ID to use for Micro PDF labels when doing Code 128 or GS1-128 emulation.

Emulation choices are:

- Micro PDF AIM ID and label type
- Code 128 / EAN128 AIM Id and label type.



★Micro PDF417 Code 128 GS1-128 Emulation = Micro PDF AIM ID and label type



Micro PDF417 Code 128 GS1-128 Emulation = Code 128 / EAN128 AIM ID and label type

Micro PDF417 Length Control

This feature specifies either variable length decoding or fixed length decoding for this symbology.

Variable Length: For variable length decoding, a minimum and maximum length may be set.

Fixed Length: For fixed length decoding, two different lengths may be set.

★Micro PDF417 Length Control = Variable Length

Micro PDF417 Length Control = Fixed Length

Micro PDF417 Set Length 1

Specifies one of the bar code lengths for "Micro PDF417 Length Control" on page 230. Length 1 is the minimum label length if in Variable Length Mode, or the first fixed length if in Fixed Length Mode. Length includes the bar code's data characters only. Characters can be set from 0001 to 0366 characters (pad with zeroes) in increments of 01. Any value greater than 0366 will be considered to be 0366.

See "Set Length 1" on page 302 for detailed instructions on setting this feature.

Select Micro PDF417 Length 1 Setting

To configure this feature, scan the ENTER/EXIT PROGRAMMING MODE bar code above, then the bar code at left followed by the digits from the Alphanumeric characters in Appendix D, Keypad representing your desired character(s). End by scanning the ENTER/EXIT bar code again.

Make a mistake? Scan the CANCEL bar code to abort and not save the entry string. You can then start again at the beginning.

CANCEL

★0001 = Length 1 is 1 Character

Micro PDF417 Set Length 2

This feature specifies one of the bar code lengths for "Micro PDF417 Length Control" on page 230. Length 2 is the maximum label length if in Variable Length Mode, or the second fixed length if in Fixed Length includes the bar code's data characters only. Characters can be set from 0001 to 0366 characters (pad with zeroes) in increments of 01. Any value greater than 0366 will be considered to be 0366.

See "Set Length 2" on page 303 for detailed instructions on setting this feature.

Select Micro PDF417 Length 2 Setting

To configure this feature, scan the ENTER/EXIT PROGRAMMING MODE bar code above, then the bar code at left followed by the digits from the Alphanumeric characters in Appendix D, Keypad representing your desired character(s). End by scanning the ENTER/EXIT bar code again.

Make a mistake? Scan the CANCEL bar code to abort and not save the entry string. You can then start again at the beginning.

CANCEL

★Length 2 i s 0366 Characters

QR CODE

QR Code Enable / Disable

Enables/disables the ability of the reader to decode QR Code labels.

QR Code = Disable

★QR Code = Enable

QR Code Length Control

This feature specifies either variable length decoding or fixed length decoding for this symbology.

Variable Length: For variable length decoding, a minimum and maximum length may be set.

Fixed Length: For fixed length decoding, two different lengths may be set.

★QR Code Length Control = Variable Length

QR Code Length Control = Fixed Length

QR Code Set Length 1

This feature specifies one of the bar code lengths for "QR Code Length Control" on page 232. Length 1 is the minimum label length if in Variable Length Mode, or the first fixed length if in Fixed Length Mode. Characters can be set from 0001 to 7,089 characters in increments of 0001 (pad with zeroes).

See "Set Length 1" on page 302 for detailed instructions on setting this feature.

Select QR Code Length 1 Setting

To configure this feature, scan the ENTER/EXIT PROGRAMMING MODE bar code above, then the bar code at left followed by the digits from the Alphanumeric characters in Appendix D, Keypad representing your desired character(s). End by scanning the ENTER/EXIT bar code again.

Make a mistake? Scan the CANCEL bar code to abort and not save the entry string. You can then start again at the beginning.

CANCEL

★0001 = Length 1 is 1 Character

QR Code Set Length 2

This feature specifies one of the bar code lengths for "QR Code Length Control" on page 232. Length 2 is the maximum label length if in Variable Length Mode, or the second fixed length if in Fixed Length Mode. Characters can be set from 0001 to 7,089 characters in increments of 0001 (pad with zeroes).

See "Set Length 2" on page 303 for detailed instructions on setting this feature.

Select QR Code Length 2 Setting

To configure this feature, scan the ENTER/EXIT PROGRAMMING MODE bar code above, then the bar code at left followed by the digits from the Alphanumeric characters in Appendix D, Keypad representing your desired character(s). End by scanning the ENTER/EXIT bar code again.

Make a mistake? Scan the CANCEL bar code to abort and not save the entry string. You can then start again at the beginning.

CANCEL

★Length 2 i s 7,089 Characters

GS1 Digital Link - Allow QR Code with URL Link

This feature is used to decode and send QR codes containing an URL.

GS1 Digital Link QR Code with URL Link = Disable

★GS1 Digital Link QR Code with URL Link = Enable

MICRO QR CODE

Micro QR Code Enable / Disable

Enables/disables the ability of the reader to decode Micro QR Code labels.



Micro QR Code = Disable



★Micro QR Code = Enable

Micro QR Code Length Control

This feature specifies either variable length decoding or fixed length decoding for this symbology.

Variable Length: For variable length decoding, a minimum and maximum length may be set.

Fixed Length: For fixed length decoding, two different lengths may be set.



★Micro QR Code Length Control = Variable Length



Micro QR Code Length Control = Fixed Length

Micro QR Code Set Length 1

This feature specifies one of the bar code lengths for "Micro QR Code Length Control" on page 235. Length 1 is the minimum label length if in Variable Length Mode, or the first fixed length if in Fixed Length Mode. Characters can be set from 0001 to 0035 characters in increments of 0001 (pad with zeroes).

See "Set Length 1" on page 302 for detailed instructions on setting this feature.

Select Micro QR Code Length 1 Setting

To configure this feature, scan the ENTER/EXIT PROGRAMMING MODE bar code above, then the bar code at left followed by the digits from the Alphanumeric characters in Appendix D, Keypad representing your desired character(s). End by scanning the ENTER/EXIT bar code again.

Make a mistake? Scan the CANCEL bar code to abort and not save the entry string. You can then start again at the beginning.

CANCEL

★0001 = Length 1 is 1 Character

Micro QR Code Set Length 2

This feature specifies one of the bar code lengths for "Micro QR Code Length Control" on page 235. Length 2 is the maximum label length if in Variable Length Mode, or the second fixed length if in Fixed Length Mode. Characters can be set from 0001 to 0035 characters in increments of 0001 (pad with zeroes).

See "Set Length 2" on page 303 for detailed instructions on setting this feature.

Select Micro QR Code Length 2 Setting

To configure this feature, scan the ENTER/EXIT PROGRAMMING MODE bar code above, then the bar code at left followed by the digits from the Alphanumeric characters in Appendix D, Keypad representing your desired character(s). End by scanning the ENTER/EXIT bar code again.

Make a mistake? Scan the CANCEL bar code to abort and not save the entry string. You can then start again at the beginning.

CANCEL

★Length 2 i s 0035 Characters

GS1 DIGITAL LINK

NOTE: "GS1 Digital Link - Allow QR Code with URL Link" on page 234 **must be enabled for GS1 Digital Link to work.**

GS1 Digital Link Transmit Mode

This feature sets transmit mode for GS1 label set.

★GS1 Digital Link Transmit Mode = Disable

GS1 Digital Link Transmit Mode 1 = Send only the first GS1 label

GS1 Digital Link Transmit Mode 3 = Send all GS1 label

GS1 Digital Link Transmit Mode 2 = Prefer 2D GS1 label

GS1 Digital Link Set Labels Read Timeout

This feature builds one GS1 Label. Remaining labels of the same GS1 label set must be read within timeout to be considered part of the set. This value is multiplied by 10ms step.

GS1 Digital Link Labels Read Timeout

To configure this feature, scan the ENTER/EXIT PROGRAMMING MODE bar code above, then the bar code at left followed by a maximum of 2 digits from the Alphanumeric characters in Appendix D, Keypad. The digits must be the hexadecimal ASCII representation of the desired characters. End by scanning the ENTER/EXIT bar code again.

Make a mistake? Scan the CANCEL bar code to abort and not save the entry string. You can then start again at the beginning.

CANCEL

★300 ms

GS1 Digital Link Set Double Read Timeout

This feature is used to prevent sending any additional labels of set after transmission of label set result. This value is multiplied by 10ms step.

GS1 Digital Link Double Read Timeout

To configure this feature, scan the ENTER/EXIT PROGRAMMING MODE bar code above, then the bar code at left followed by a maximum of 2 digits from the Alphanumeric characters in Appendix D, Keypad. The digits must be the hexadecimal ASCII representation of the desired characters. End by scanning the ENTER/EXIT bar code again.

Make a mistake? Scan the CANCEL bar code to abort and not save the entry string. You can then start again at the beginning.

CANCEL

★700 ms

GS1 Digital Link Transmit Format

This feature formats GS1 2D labels in the Label Set that was transmitted before.

There are four possible formats:

1. Send as its original label type, including web address part
2. Send the content its original label type, stripping web address part
3. Send the content as GS1 Databar-14 containing only GTIN data portion, changing also Label ID and AIM ID if needed
4. Send the GTIN data portion in simplest form as Databar-14, EAN13, UPCA.
5. Send the GTIN data portion in shortest UPC/EAN compatibility form as Databar-14, EAN13, UPCA, EAN8, UPCE.



★GS1 Digital Link Transmit Format = original label + web address



GS1 Digital Link Transmit Format = original label & no web address



GS1 Digital Link Transmit Format = Send as GS1 Databar-14 with only GTIN



GS1 Digital Link Transmit Format = Send the GTIN data as Databar-14, EAN13, UPCA



GS1 Digital Link Transmit Format = Send the GTIN data portion in shortest UPC/EAN compatibility form as Databar-14, EAN13, UPCA, EAN8, UPCE

GS1 Digital Link Label Set ID Character for Mode 3

This is a field identifier for the GS1 Label Set that is transmitted. It is located before the label data.

GS1 Digital Link Label Set ID Character

To configure this feature, scan the ENTER/EXIT PROGRAMMING MODE bar code above, then the bar code at left followed by a maximum of 6 digits from the Alphanumeric characters in Appendix D, Keypad. The digits must be the hexadecimal ASCII representation of the desired characters. End by scanning the ENTER/EXIT bar code again.

Make a mistake? Scan the CANCEL bar code to abort and not save the entry string. You can then start again at the beginning.

CANCEL

★Default value = $n

UCC COMPOSITE

UCC Optional Composite Timer

Specifies the amount of time the system will wait for the stacked part of a UCC Composite label before transmitting the linear label without an add-on.



★UCC Optional Composite Timer = Timer Disabled



UCC Optional Composite Timer = 70 msec



UCC Optional Composite Timer = 100 msec



UCC Optional Composite Timer = 200 msec



UCC Optional Composite Timer = 300 msec

Postal Code Selection

Enables/disables the ability of the reader to decode labels of a specific postal symbology.

- Disable All Postal Codes
- Postnet
- Planet
- Royal Mail
- Kix
- Australia Post
- Japan Post
- IMB
- Sweden Post
- Portugal Post
- Mail Mark
- Finnish Post

★Postal Code Selection = Disable All Postal Codes

Postal Code Selection = Enable Postnet

Postal Code Selection = Enable Planet

Postal Code Selection = Enable Royal Mail

Postal Code Selection = Enable Kix

Postal Code Selection = Enable Australia Post

Postal Code Selection = Enable Japan Post



Postal Code Selection = Enable IMB



Postal Code Selection = Enable Sweden Post



Postal Code Selection = Enable Portugal Post



Postal Code Selection = Enable Mail Mark



Postal Code Selection = Enable Finnish Post

Postnet BB Control

Controls the ability of the reader to decode B and B' fields of Postnet labels.



★Postnet BB Control = Disable



Postnet BB Control = Enable

CONFIGURATION | OCR DECODING

The GX46 bar code family is equipped with an Optical Character Recognition feature.

This section describes how to configure the Datalogic bar code reader to enable OCR decoding.

The Gx46 models support the following OCR font types:

- OCR-A
- OCR-B
- MICR E13B
- US Currency Serial Number.

In most OCR applications a suitable usage of check digits and the addition of constraints on sub-strings types (e.g. digits-only or letter-only) reduces misdecoding probabilities.

The user can choose between a set of predefined templates (already optimized for decoding) and customizable free templates.

For free templates, as OCR decoding is less reliable than traditional barcode decoding, the reader provides tools to minimize misdecoded labels. As a result, particular care shall be dedicated to the setup of free custom templates to reduce incorrect output.

For more information on how to customize the user templates for your needs, please contact Datalogic Technical Support.

Use one of the following labels to enable one of the predefined templates for OCR decoding.

OCR Decoding Predefined Templates

The following selections are exclusive, enabling one template automatically disables the others.



★OCR Predefined Template = Disable OCR Function



OCR Predefined Template = EU Identity Card OCR



OCR Predefined Template = IATA Passport OCR



OCR Predefined Template = Italian Post OCR Payment



OCR Predefined Template = Italian Bank Freccia Bank Payment form



OCR Predefined Template = Swiss Driving License OCR

CONFIGURATION | MOTION FEATURES

SECTION CONTENTS

MOTION FEATURES starting on page 246

- Motionless Timeout
- Motion Sensitivity
- High Motion Immunity
- Motion Aiming Control

Use this chapter to configure motion settings for the handheld.

Reference Appendix B, for a listing of standard factory settings.

Motionless Timeout

The period of time that must expire without detecting any motion, before the reader is assumed to be in a motionless condition. The selectable setting is from 500 to 25,500 milliseconds in 100 millisecond increments. This option relates to such features as Aimer On and Stand Mode/Object Detection scanning with respect to motion.

Select Motionless Timeout

To configure this feature, scan the ENTER/EXIT PROGRAMMING MODE bar code above, then the bar code at left followed by the digits from the Alphanumeric characters in Appendix D, Keypad representing your desired character(s). End by scanning the ENTER/EXIT bar code again.

Make a mistake? Scan the CANCEL bar code to abort and not save the entry string. You can then start again at the beginning.

CANCEL

★020 = Motionless Timeout = 2 seconds

Motion Sensitivity

Sets the sensitivity level for motion detection wakeup. Choices are low, medium and high.

Motion Sensitivity = Low

★Motion Sensitivity = Medium

Motion Sensitivity = High

High Motion Immunity

When set to triggerless scanning mode (e.g. Flashing, Always On, Stand Mode/Object Detection, etc.) the reading capabilities can be modified according to two main goals:

• increased performance for rapidly moving barcodes - Enable High Motion Immunity:

•increased performance for distant barcodes - Disable High Motion Immunity:

Depending on specific environmental conditions, application requirements, or expected performance, choose the best solution.



★High Motion Immunity = Disable



High Motion Immunity = Enable

Motion Aiming Control

Enables/Disables the Aiming system when motion is detected.



Motion Aiming Control = Disable



★Motion Aiming Control = Enable

CONFIGURATION | POWER MANAGEMENT

SECTION CONTENTS

POWER SAVE starting on page 250

- Powerdown Timeout

BATTERY PROFILES starting on page 251

- Battery Profiles
- Battery Information

These parameters refer to Mobile units only (either GBT4600 or GM4600 models).

POWER SAVE

Powerdown Timeout

The Powerdown Timeout feature sets the time for automatically switching the unit off when the imager has been idle.



Powerdown Timeout = Disable



Powerdown Timeout = 10 minutes



Powerdown Timeout = 20 minutes



★Powerdown Timeout = 30 minutes



Powerdown Timeout = 60 minutes (1 hour)



Powerdown Timeout = 120 minutes (2 hours)

BATTERY PROFILES

Battery Profiles

Gryphon GBT/GM4600 provides the user the ability to select different usage profiles to better configure the reader with respect to specific needs. By default, the Maximum Performance profile is selected and provides high snappiness and max reading capability. The user can then decide to exploit specific features when others are considered less important, for instance: fast battery recharge instead of battery health, maximum reading performance instead of battery autonomy, etc.

The following Battery Profiles are described with associated benefits and limitations:



★Battery Profile = Maximum Performance



Battery Profile = Maximum Battery Health



Battery Profile = Maximum Autonomy



Battery Profile = Fast Charge



Maximum Performance (default)

- Reader autonomy for heavy workload (80.000 scans for more than 22h)
- Motionix™ enabled
- Max radio communication performances



Maximum Battery Health

- Battery capacity is preserved
- Reduced max charging current
- Reduced battery capacity by ~20%
- Increased recharge time: +20% on average (it depends on the specific reader configuration)



Maximum Autonomy

- Max reader autonomy (approx. 83h)
- Motionix™ disabled
- Vibro motor disabled
- Increased Sniff-time period (Bluetooth®)



Fast Charge

- Reduced recharge time (approx. 20%)
- Motionix™ disabled
- Vibro motor disabled
- Scan-While-Charging disabled (Trigger Single)

Battery Information

By using Datalogic Aladdin utility, additional battery data can be retrieved, i.e.:

- HH Serial Number
- Charge %
- Health %
- Full Charge Capacity
- Designed Capacity
- Nominal Capacity
- Remaining Capacity
- Discharging Counter
- Charging Status
- Charging (base station) Battery Voltage
- Battery Current
- Manufacturer Date
- Battery Serial Number
- Battery Model Number

If more than one reader is connected to a base station, battery data will be retrieved for each reader.

CONFIGURATION | WIRELESS FEATURES

SECTION CONTENTS

WIRELESS BEEPER FEATURES starting on page 254

- Good Transmission Beep
- Beeper Frequency
- Beep Duration
- Beep Volume
- Disconnect Beep
- Docking (Connecting) Beep
- Leash Alarm
- Leash Alarm off time
- Leash Alarm on time

CONFIGURATION UPDATES starting on page 260

- Automatic Configuration Update
- Copy Configuration to Reader
- Copy Configuration to Base Station

BATCH FEATURES starting on page 261

- Batch Mode
- Send Batch
- Erase Batch Memory
- RF Batch Mode Transmit Delay

DIRECT RADIO AUTOLINK starting on page 264

- Direct Radio Autolink

RF ADDRESS STAMPING starting on page 265

- Source Radio Address Transmission
- Source Radio Address Delimiter Character

BLUETOOTH-ONLY FEATURES starting on page 266

- Bluetooth Security Level
- Bluetooth Radio Output Power
- Wi-Fi Channels Exclusion

BLUETOOTH HID FEATURES starting on page 273

- Bluetooth HID Alt Mode

FEATURES FOR STAR MODELS ONLY starting on page 274

- STAR Radio Protocol Timeout
- STAR Radio Transmit Mode
- STAR Frequency Agility

WIRELESS BEEPER FEATURES

Several options are available to configure beeper behavior for RF operation.

Good Transmission Beep

Enables/disables the Good Transmission Beep indication. When enabled, a beep occurs when a Label is correctly transmitted to the base.



Good Transmission Beep = Disable



★Good Transmission Beep = Enable

Beeper Frequency

Adjusts radio-specific beep indications to sound at a low, medium or high frequency, selectable from the list below (controls the beeper's pitch/tone).



★Beep Frequency = Low



Beep Frequency = Medium



Beep Frequency = High

Beep Duration

This feature controls the duration of radio-specific beep indications.



Beep Duration = 60 msec



★Beep Duration = 80 msec



Beep Duration = 100 msec



Beep Duration = 120 msec



Beep Duration = 140 msec



Beep Duration = 160 msec



Beep Duration = 180 msec



Beep Duration = 200 msec

Beep Volume

Selects the beeper volume (loudness) of radio-specific beep indications. There are three selectable volume levels.



Beep Volume = Low



Beep Volume = Medium



★Beep Volume = High

Disconnect Beep

Enables/disables the beep indication that a handheld has become disconnected from a Base Station.



Disconnect Beep = Disable



★Disconnect Beep = Enable

Docking (Connecting) Beep

Enables/disables a beep indication when the handheld connects to the Base Station.



Docking Beep = Disable



★Docking Beep = Enable

Leash Alarm

Specifies the number of cycles to sound the Leash Mode beeps when the Handheld goes out of range, 3 beeps per cycle. This is especially useful in instances where the reader might inadvertently have been placed in a bag or cart.

For this mode to be effective, the reader must be linked to the Base Station. If the reader is asleep or disconnected from the Base Station, there is no way for it to know where it is relative to the Base Station because communication is not active between the devices.



★Leash Alarm = Disable



Leash Alarm = 1 Cycle



Leash Alarm = 3 Cycles



Leash Alarm = 6 Cycles

Leash Alarm (continued)

Leash Alarm = 9 Cycles



Leash Alarm = 12 Cycles



Leash Alarm = 15 Cycles



Leash Alarm = 18 Cycles



Leash Alarm = 21 Cycles

Leash Alarm off time

This feature builds one Leash Alarm off time. Remaining labels of the same Leash Alarm set must be read within timeout to be considered part of the set. This value is multiplied by 10ms step.

Leash Alarm = Beep off time

To configure this feature, scan the ENTER/EXIT PROGRAMMING MODE bar code above, then the bar code at left followed by a maximum of 2 digits from the Alphanumeric characters in Appendix D, Keypad. The digits must be the hexadecimal ASCII representation of the desired characters. End by scanning the ENTER/EXIT bar code again.

Make a mistake? Scan the CANCEL bar code to abort and not save the entry string. You can then start again at the beginning.

CANCEL

★23

Leash Alarm on time

This feature builds one Leash Alarm on time. Remaining labels of the same Leash Alarm set must be read within timeout to be considered part of the set. This value is multiplied by 10ms step.

Leash Alarm = Beep on time

To configure this feature, scan the ENTER/EXIT PROGRAMMING MODE bar code above, then the bar code at left followed by a maximum of 2 digits from the Alphanumeric characters in Appendix D, Keypad. The digits must be the hexadecimal ASCII representation of the desired characters. End by scanning the ENTER/EXIT bar code again.

Make a mistake? Scan the CANCEL bar code to abort and not save the entry string. You can then start again at the beginning.

CANCEL

CONFIGURATION UPDATES

Automatic Configuration Update

When this feature is enabled, a reader and its linked Base Station can automatically ensure they stay in sync with regard to application hardware and/or configuration. See page 300 for more information on this feature.

Automatic Configuration Update = Disable

★Automatic Configuration Update = Enable

Copy Configuration to Reader

Scan the following label to copy the current Base Station configuration to the reader. Use this method when the Auto Configuration Update feature is disabled and you want a one-time configuration update to be performed on the reader.

NOTE: Do not scan an ENTER/EXIT PROGRAMMING MODE label in conjunction with this bar code.

Copy Configuration to Reader

Copy Configuration to Base Station

Scan the following label to copy the current reader configuration to the Base Station. Use this method when the Auto Configuration Update feature is disabled and you want a one-time configuration update to be performed on the Base Station.

NOTE: Do not scan an ENTER/EXIT PROGRAMMING MODE label in conjunction with this bar code.

Copy Configuration to Base Station

BATCH FEATURES

Batch Mode

This option specifies whether to store labels in the handheld while disconnected from the base. Options are as follows:

- Disabled — The handheld will not store/batch labels.
- Automatic — The handheld will store labels to RAM when the handheld goes out of range and is disconnected from the remote device.
- Manual — The handheld will always store labels to Flash memory. The user must manually send the stored labels to the remote device using a special "batch send" label.



★Batch Mode = Disable



Batch Mode = Automatic



Batch Mode = Manual

Send Batch

When the reader is configured in Manual Batch Mode, use the following bar code to initiate sending of labels stored in batch memory.

NOTE: Do not scan an ENTER/EXIT PROGRAMMING MODE label in conjunction with this bar code.



Send Batch

Erase Batch Memory

When the reader is configured in Manual Batch Mode, use the following bar code to erase any labels stored in batch memory.

NOTE: Do not scan an ENTER/EXIT PROGRAMMING MODE label in conjunction with this bar code.

Erase Batch Memory



RF Batch Mode Transmit Delay

Specifies the delay in 10 msec increments between transmitting labels stored in batch memory.



★RF Batch Mode Transmit Delay = No Delay



RF Batch Mode Transmit Delay = 50 msec



RF Batch Mode Transmit Delay =100 msec



RF Batch Mode Transmit Delay = 0.5 seconds



RF Batch Mode Transmit Delay = 1 second



RF Batch Mode Transmit Delay = 2.5 seconds

DIRECT RADIO AUTOLINK

Direct Radio Autolink

This feature enables/disables the ability to link a wireless handheld to a base station without scanning the Unlink label first.



★Direct Radio Link = Unlink Label Required



Direct Radio Link = Automatic Unlinking

RF ADDRESS STAMPING

These features allow configuration of source radio data inclusion.

Source Radio Address Transmission

Enables/disables the ability of source radio address information to be transmitted to the host and, if so, at what position with respect to the label data. See page 300 in “References” for detailed information and examples for setting this feature.

NOTE: When included as a prefix, the source-radio ID is displayed after all label formatting has been applied. The 6 byte hex address is sent as 12 ASCII characters, i.e., an address of 00 06 66 00 1A ED will be sent as (shown in hex): 30 30 30 36 36 36 30 30 31 41 45 44



★Source Radio Address Transmission = Do Not Include



Source Radio Address Transmission = Prefix

Source Radio Address Delimiter Character

This option specifies the delimiter character to be placed between the label data and radio address when address stamping is enabled.

NOTE: This feature only applies if "Source Radio Address Transmission" on page 265 **is enabled.**



Set Source Radio Address Delimiter Character

To configure this feature, scan the ENTER/EXIT PROGRAMMING MODE bar code above, then the bar code at left followed by the digits from the Alphanumeric characters in Appendix D, Keypad representing your desired character(s). End by scanning the ENTER/EXIT bar code again.

Make a mistake? Scan the CANCEL bar code to abort and not save the entry string. You can then start again at the beginning.



CANCEL

★Delimiter Character = 00 (no delimiter character)

BLUETOOTH-ONLY FEATURES

The features in this section are valid only for Gryphon Bluetooth models.

NOTE: Changing the configuration parameters described in this section may cause a temporary loss of the Bluetooth connection between the Reader and the remote device.

Bluetooth Security Level

NOTE: This parameter applies when pairing the Reader with a third party Bluetooth device. It has no effect when linking the Reader to a Base station.

Set this parameter according to the security requirements of the application scenario when the reader will be employed.

- Select Level 1 - lowest when the main application requirement is to avoid any user interaction (e.g. Passkey or PIN entry) during the pairing process. When using this setting, the resulting Bluetooth connection will be encrypted but not authenticated.
- Select Level 2 when encryption is required, authentication is not required, and minimal user interaction is desired. In this case the Host may ask the user to enter a 6-digit Bluetooth Passkey during the pairing process.
- Select Level 3 - highest when a secure connection to the Host is desired, with both encryption and authentication. In this case the Host will ask the user to enter a 6-digit Bluetooth Passkey or a Bluetooth PIN during the pairing process.

If the Host prompts the user to enter a Bluetooth Passkey or PIN code during the pairing process, please refer to "" on page 28 to perform this task.

NOTE: When device authentication takes place during the pairing process, by means of the passkey or PIN entry, the resulting Bluetooth link is protected from Man-In-The-Middle (MITM) malicious attacks.

NOTE: The actual behaviors of the Reader and of the Host system during the pairing process depend on the security settings of both devices involved, and on the input and output means available on each device to interface with the user.

This means that:

- **the user may be required to enter a BT Passkey during the pairing process even if the reader's BT Security Level is set to "Encryption required, authentication not required". This depends on the configuration of the Host system.**
- **when the reader's BT Security Level is set to "Encryption and authentication required", it may not be possible to connect to a Host system if the latter cannot support the Passkey Entry authentication procedure. In this case, try to set the reader's BT Security Level to "Encryption required, authentication not required" to establish the connection.**

NOTE: Changing the BT Security Level setting will unlink the Reader from the remote device.

★BT Security Level = Level 1 - lowest

BT Security Level = Level 2

BT Security Level = Level 3 - highest

Bluetooth Radio Output Power

Set this parameter according to the desired radio range of the Reader:

- Class 1: max 100 meters
- Class 2: max 20 meters
- Class 3: max 5 meters

Reducing the maximum radio range can help extend the battery life of the Reader and reduce the interferences caused to nearby wireless devices that operate in the same 2.4 GHz frequency band.

★Bluetooth Output Power = Class 1 (highest)

Bluetooth Output Power = Class 2

Bluetooth Output Power = Class 3 (lowest)

Wi-Fi Channels Exclusion

In case the Reader operates in the same environment as 2.4 GHz Wi-Fi equipment, set this parameter to configure the strategy that the Reader should employ to minimize the interferences between Bluetooth and Wi-Fi wireless technologies.

- If the specific 802.11 standard or the frequency channels used by the Wi-Fi equipment are unknown, select Automatic to let the Reader use the Adaptive Frequency Hopping (AFH) feature of Bluetooth technology. With this setting, the Reader and the remote Bluetooth device may automatically detect the frequency channels affected by a significant level of interference, and avoid using these channels during Bluetooth data exchange.
- If the specific 802.11 standard and the frequency channels used by the Wi-Fi equipment are known, select the corresponding combination from the list of programming labels below or use the Datalogic Aladdin tool. With this setting, the Reader and the remote Bluetooth device avoid using the Bluetooth frequency channels that overlap with the already occupied Wi-Fi channels.

For example, if the co-located 2.4 GHz Wi-Fi equipment operates according to the 802.11g standard on channels n. 6 and n. 11, read the 802.11b/g ch.6 and 11 programming label.

NOTE: The programming labels in the list below cover the most popular combinations of 802.11 standards and 2.4 GHz Wi-Fi channels. If the configuration command corresponding to your specific scenario is not listed, please contact Datalogic Technical Support for further configuration options.

★WiFi Ch. Exclusion = Automatic

WiFi Ch. Exclusion = 802.11b_g ch.1

WiFi Ch. Exclusion = 802.11b_g ch.2

WiFi Ch. Exclusion = 802.11b_g ch.3

Wi-Fi Channels Exclusion (continued)



WiFi Ch. Exclusion = 802.11b_g ch.4



WiFi Ch. Exclusion = 802.11b_g ch.5



WiFi Ch. Exclusion = 802.11b_g ch.6



WiFi Ch. Exclusion = 802.11b_g ch.7



WiFi Ch. Exclusion = 802.11b_g ch.8



WiFi Ch. Exclusion = 802.11b_g ch.9



WiFi Ch. Exclusion = 802.11b_g ch.10



WiFi Ch. Exclusion = 802.11b_g ch.11

Wi-Fi Channels Exclusion (continued)



WiFi Ch. Exclusion = 802.11b_g ch.12



WiFi Ch. Exclusion = 802.11b_g ch.13



WiFi Ch. Exclusion = 802.11b_g ch.14



WiFi Ch. Exclusion = 802.11b_g ch.1 and 6



WiFi Ch. Exclusion = 802.11b_g ch.1 and 11



WiFi Ch. Exclusion = 802.11b_g ch.6 and 11



WiFi Ch. Exclusion = 802.11b_g ch.1 and 6 and 11



WiFi Ch. Exclusion = 802.11b_g ch.2 and 7

Wi-Fi Channels Exclusion (continued)



WiFi Ch. Exclusion = 802.11b_g ch.2 and 12



WiFi Ch. Exclusion = 802.11b_g ch.7 and 12



WiFi Ch. Exclusion = 802.11b_g ch.2 and 7 and 12



WiFi Ch. Exclusion = 802.11b_g ch.3 and 8



WiFi Ch. Exclusion = 802.11b_g ch.3 and 13



WiFi Ch. Exclusion = 802.11b_g ch.8 and 13



WiFi Ch. Exclusion = 802.11b_g ch.3 and 8 and 13



WiFi Ch. Exclusion = 802.11b_g ch.4 and 9

Wi-Fi Channels Exclusion (continued)



WiFi Ch. Exclusion = 802.11b_g ch.4 and 14



WiFi Ch. Exclusion = 802.11b_g ch.9 and 14



WiFi Ch. Exclusion = 802.11b_g ch.4 and 9 and 14



WiFi Ch. Exclusion = 802.11b_g ch.5 and 10



WiFi Ch. Exclusion = 802.11n ch.3



WiFi Ch. Exclusion = 802.11n ch.11

BLUETOOTH HID FEATURES

Before connecting the Reader to a Bluetooth HID host device, the keyboard emulation used for label transmission can be configured using the parameters described in this section, plus the following parameters:

- "Setting Country Mode" on page 55
- "Encoding Type" on page 69
- "ALT Output Type" on page 76
- "Keyboard Numeric Keypad" on page 77
- "Keyboard Send Control Characters" on page 78

Bluetooth HID Alt Mode

Enable/Disable the ability to correctly transmit a label to the host regardless of the Bluetooth HID Country Mode selected, when Bluetooth HID Profile is configured.

Read the configuration command label below for the HID Alt Mode feature.



★HID Alt Mode = OFF



HID Alt Mode = ON

FEATURES FOR STAR MODELS ONLY

The features in this section are valid only for the Gryphon I GM460X Star model:

- "STAR Radio Protocol Timeout" on page 274
- "STAR Radio Transmit Mode" on page 275

STAR Radio Protocol Timeout

This parameter sets the valid wait time before transmission between the handheld reader and Base Station is considered failed.

When setting this parameter, take into consideration the radio traffic (number of readers in the same area). The selectable range for this feature is from 02 to 25 seconds. See page 301 in “References” for detailed information and examples for setting this feature.

Set Radio Protocol Timeout

To configure this feature, scan the ENTER/EXIT PROGRAMMING MODE bar code above, then the bar code at left followed by the digits from the Alphanumeric characters in Appendix D, Keypad representing your desired character(s). End by scanning the ENTER/EXIT bar code again.

Make a mistake? Scan the CANCEL bar code to abort and not save the entry string. You can then start again at the beginning.

CANCEL

★Radio Protocol Timeout = 02 (2 seconds)

STAR Radio Transmit Mode

Specifies the transmission protocol for Star communications.

Options are:

- ACK from base station to reader — signals a good transmission as soon as the Base Station receives a label
- ACK when sent to host — reader signals a good transmission as soon as the Base Station has sent the label to the host
- ACK from host — reader signals a good transmission as soon as the Base Station has sent the label to the host and host has replied with an acknowledge message.



★STAR Radio Transmit Mode = ACK from Base Station



STAR Radio Transmit Mode = ACK When Sent to Host



STAR Radio Transmit Mode = ACK from Host



NOTE: ACK from host works only for RS-232 or USB-COM interfaces with ACK/NACK disabled. If ACK from host is configured with any other interface conditions, it works like ACK when sent to host.

See "Message Formatting" on page 304. for details.



NOTE: The Base Station can receive a host message only if Host Commands Obey/Ignore (page 39) is set to Ignore.

STAR Frequency Agility

In exceptionally noisy environments or in case of a high concentration of radio devices, the STAR system performance may be improved by enabling the STAR Frequency Agility feature. This feature changes the way the radio frequencies are used in a STAR communication system.

NOTE: Only for 910 MHz Model.

As in the case of the STAR System Speed, use the following procedure:

1. link the Reader to the Base;
2. scan the ENTER/EXIT PROGRAMMING MODE bar code above; read either the “Enable” or “Disable” programming label below to Enable or Disable the feature; end by scanning the ENTER/EXIT bar code again.
3. place the Reader into the Base.

The Reader and the Base will be linked and the new frequency handling strategy will be operational.

NOTE: It is possible to configure the STAR system to use a fixed channel with different frequency from the default one. Please contact Datalogic Technical Support for information about this feature. Please refer to Table on page 276 for valid combinations of this feature with the STAR System Speed configuration parameter.

NOTE: Gryphon Star 433 MHz models do not support STAR Frequency Agility

★STAR Frequency Agility = Disable
(use default fixed channel)

STAR Frequency Agility = Enable

CHAPTER 4
REFERENCES

This section contains explanations and examples of selected bar code features. See Configuration with Bar Codes, starting on page 37 for the actual bar code labels used to configure the reader.

SECTION CONTENTS

RS-232 PARAMETERS on page 278

- Baud Rate
- Data Bits
- Stop Bits
- Parity
- Handshaking Control

RS-232/USB COM PARAMETERS on page 279

- Intercharacter Delay
- ACK NAK Options
- ACK Character
- NAK Character
- ACK NAK Timeout Value
- ACK NAK Retry Count
- Disable Character
- Enable Character

DATA FORMAT on page 286

- Data Editing
- Global Prefix/Suffix
- Global AIM ID
- Label ID
- Character Conversion

SCANNING FEATURES on page 294

- Scan Mode
- Scanning Active Time
- Aiming Duration Time
- Flash On Time
- Flash Off Time

LED AND BEEPER INDICATORS on page 299

- Good Read LED Duration

RF FEATURES on page 300

- Automatic Configuration Update
- RF Address Stamping
- STAR Radio Protocol Timeout

SYMBOLOGIES on page 302

- Set Length

RS-232 PARAMETERS

RS-232 ONLY

Baud Rate

Baud rate is the number of bits of data transmitted per second. Set the reader's baud rate to match the baud rate setting of the host device. With an improper baud rate setting, data may not reach the host correctly.

Data Bits

This parameter allows the reader to interface with devices requiring a 7-bit or 8-bit ASCII protocol for sending and receiving data.

Stop Bits

The stop bit(s) at the end of each transmitted character marks the end of transmission of one character and prepares the receiving device for the next character in the serial data stream. The number of stop bits selected (one or two) depends on the number the receiving terminal is programmed to accommodate. Set the number of stop bits to match host device requirements.

Parity

This feature specifies parity required for sending and receiving data. A parity check bit is the most significant bit of each ASCII coded character. Select the parity type according to host device requirements.

- Select None when no parity bit is required.
- Select Odd parity and the parity bit value is set to 0 or 1, based on data, to ensure that an odd number of 1 bits are contained in the coded character.
- Select Even parity and the parity bit value is set to 0 or 1, based on data, to ensure that an even number of 1 bits are contained in the coded character.

Handshaking Control

The data interface consists of an RS-232 port designed to operate either with or without the hardware handshaking lines, Request to Send (RTS), and Clear to Send (CTS). Handshaking Control includes the following options:

- RTS — RTS is asserted during transmissions. CTS is ignored.
- RTS/CTS — RTS is asserted during transmissions. CTS gates transmissions.
- RTS/XON/XOFF — RTS is asserted during transmissions. CTS is ignored. XON and XOFF gate transmissions.
- RTS On/CTS — RTS is always asserted. CTS gates transmissions.
- RTS/CTS Scan Control — RTS is asserted during transmissions. CTS gates transmissions and controls enable and disable state of reader.

RS-232/USB COM PARAMETERS

Intercharacter Delay

This parameter specifies the intercharacter delay between the end of one character and the beginning of the next. The delay can be set within a range of zero (0) to 990 milliseconds in 10ms increments. A setting of zero specifies no delay.

To set the delay:

1. Determine the desired setting in milliseconds.
2. Divide the desired setting by 10 (setting is in 10ms increments). Pad the result with leading zeroes to yield two digits. For example: 0 = 00, 5 = 05, 20 = 20, etc.
3. Scan the ENTER/EXIT PROGRAMMING MODE bar code to enter Programming Mode.
4. Go to page 46 and scan the bar code: SELECT INTERCHARACTER DELAY SETTING.
5. Scan the appropriate two digits from the keypad in Appendix D, that represent the duration which was determined in the steps above. You will hear a two-beep indication after the last character.



NOTE: If you make a mistake before the last character, scan the CANCEL bar code to abort and not save the entry string. You can then start again at the beginning.

6. Scan the ENTER/EXIT PROGRAMMING MODE bar code to exit.

This completes the procedure. See the following table for examples of how to set this feature.

Table 4 - Intercharacter Delay Setting Examples

STEP	ACTION	EXAMPLES			
1	**Desired Setting**	50ms	150ms	600ms	850ms
2	**Divide by 10 (pad with leading zeroes to yield two-digits)**	05	10	60	85
3	**Scan ENTER/EXIT PROGRAMMING MODE**				
4	**Scan SELECT INTERCHARACTER DELAY SETTING**				
5	**Scan two characters from** Appendix D	‘0’ and ‘5’	‘1’ and 5’	‘6’ and ‘0’	8’ and ‘5’
6	**Scan ENTER/EXIT PROGRAMMING MODE**				

ACK NAK Options

This enables/disables the ability of the reader to support the RS-232 ACK/NAK protocol. When configured, the reader and/or host sends an “ACK” when it receives data properly, and sends “NAK” when the data is in error.

Options are:

- Disable
- Enable for label transmission — The reader expects an ACK/NAK response from the host when a label is sent
- Enable for host-command acknowledge — The reader will respond with ACK/NAK when the host sends a command
- Enable for label transmission and host-command acknowledge

ACK Character

This setting specifies an ASCII character or hex value to be used as the ACK character. ASCII characters or any hex value from 0 to 0xFF can be selected.



NOTE: Setting to previously defined characters such as XON, XOFF, or host commands conflicts with normal operation of these characters. 8-bit data is not recognized when the option Data Bits page 49 **has been set as 7 Data Bits.**

1. Determine the desired character or value.
2. Use the ASCII Chart on page 368 to find the hex equivalent for the desired character/value.
3. Scan ENTER/EXIT PROGRAMMING MODE to enter Programming Mode.
4. Scan the bar code: SELECT ACK CHARACTER SETTING.
5. Scan the appropriate two alphanumeric characters from the keypad in Appendix D, that represent the desired character/value determined above. The second character will cause a two-beep indication.
6. Scan the ENTER/EXIT PROGRAMMING MODE bar code to exit.

See the table below for examples of how to set this feature.

Table 5 - ACK Character Setting Examples

STEP	ACTION	EXAMPLES			
1	**Desired Character/Value**	ACK	$	@	>
2	**Hex equivalent from ASCII Chart on** page 368	0x06	0x24	0x40	0x3E
3	**Scan ENTER/EXIT PROGRAMMING MODE**				
4	**Scan SELECT ACK CHARACTER SETTING**				
5	**Scan two characters from** Appendix D	‘0’ and ‘6’	‘2’ and ‘4’	‘4’ and ‘0’	‘3’ AND ‘E’
6	**Scan ENTER/EXIT PROGRAMMING MODE**				

NAK Character

This setting specifies an ASCII character or hex value to be used as the NAK character. ASCII characters or any hex value from 0 to 0xFF can be selected.



NOTE: Setting to previously defined characters such as XON, XOFF, or host commands conflicts with normal operation of these characters. 8-bit data is not recognized when the option Data Bits on page 49 **has been set as 7 Data Bits.**

To set this feature:

1. Determine the desired character or value.
2. Use the ASCII Chart on page 368 to find the hex equivalent for the desired character/value.
3. Scan the ENTER/EXIT PROGRAMMING MODE bar code to enter Programming Mode.
4. Scan the bar code: SELECT NAK CHARACTER SETTING.
5. Scan the appropriate two alpha-numeric characters from the keypad in Appendix D, that represent the desired character/value determined above. The second character will cause a two-beep indication.
6. Scan the ENTER/EXIT PROGRAMMING MODE bar code to exit Programming Mode.

This completes the procedure. See the table below for examples of how to set this feature.

Table 6 - NAK Character Setting Examples

STEP	ACTION	EXAMPLES			
1	**Desired Character/Value**	NAK	$	@	>
2	**Hex equivalent**	0x15	0x24	0x40	0x3E
3	**Scan ENTER/EXIT PROGRAMMING MODE**				
4	**Scan SELECT NAK CHARACTER SETTING**				
5	**Scan two characters from** Appendix D	'1' and '5'	'2' and '4'	'4' and '0'	'3' AND 'E'
6	**Scan ENTER/EXIT PROGRAMMING MODE**				

ACK NAK Timeout Value

This option specifies the amount of time the reader waits for an ACK character from the host following label transmission. The selectable timeout range is 200 milliseconds to 15,000ms (15 seconds) in 200ms increments. A selection of 0 disables the timeout.

To set this value:

1. Determine the desired setting in milliseconds.
2. Divide the desired setting by 200 (setting is in 200ms increments). Pad the result with leading zeroes to yield two digits. For example: 0 = 00, 5 = 05, 20 = 20, etc.
3. Scan the ENTER/EXIT PROGRAMMING MODE bar code to enter Programming Mode.
4. Scan the bar code: SELECT ACK NAK TIMEOUT VALUE SETTING.
5. Scan the appropriate two digits from the keypad in Appendix D, that represent the duration which was determined in the steps above. You will hear a two-beep indication after the last character.



NOTE: If you make a mistake before the last character, scan the CANCEL bar code to abort and not save the entry string. You can then start again at the beginning.

6. Scan the ENTER/EXIT PROGRAMMING MODE bar code to exit Programming Mode.

This completes the procedure. See the table below for examples of how to set this feature.

Table 7 - ACK NAK Timeout Value Setting Examples

STEP	ACTION	EXAMPLES			
1	**Desired Setting**	200ms	1,000ms (1 sec.)	5200ms (5.2 sec.)	15,000ms (15 sec.)
2	**Divide by 200**	01	05	26	75
3	**Scan ENTER/EXIT PROGRAMMING MODE**				
4	**Scan SELECT ACK NAK TIMEOUT VALUE SETTING**				
5	**Scan two characters from** Appendix D	'0' and '1'	'0' and '5'	'2' and '6'	'7' AND '5'
6	**Scan ENTER/EXIT PROGRAMMING MODE**				

ACK NAK Retry Count

This feature specifies the number of times the reader retries a label transmission due to a retry condition. The selectable range is from 1 to 254 retries. A selection of 0 disables the count, and a selection of 255 specifies unlimited retries.

To set this feature:

1. Determine the desired setting.
2. Pad the number with leading zeroes to yield three digits. For example: 0 = 000, 5 = 005, 20 = 020, etc.
3. Scan the ENTER/EXIT PROGRAMMING MODE bar code to enter Programming Mode.
4. Scan the bar code: SELECT ACK NAK RETRY COUNT SETTING.
5. Scan the appropriate three digits from the keypad in Appendix D, that represent the number which was determined in the steps above. You will hear a two-beep indication after the last character.



NOTE: If you make a mistake before the last character, scan the CANCEL bar code to abort and not save the entry string. You can then start again at the beginning.

6. Scan the ENTER/EXIT PROGRAMMING MODE bar code to exit Programming Mode.

This completes the procedure. See the table below for examples of how to set this feature.

Table 8 - ACK NAK Retry Count Setting Examples

STEP	ACTION	EXAMPLES			
1	**Desired Setting**	Disable Retry Count	3 Retries	54 Retries	Unlimited Retries
2	**Pad with leading zero(es)**	000	003	054	255
3	**Scan ENTER/EXIT PROGRAMMING MODE**				
4	**Scan SELECT ACK NAK RETRY COUNT SETTING**				
5	**Scan three characters from** Appendix D	'0', '0' and '0'	'0', '0' and '3'	'0', '5' and '4'	'2', '5' and '5'
6	**Scan ENTER/EXIT PROGRAMMING MODE**				

Disable Character

Specifies the value of the RS-232 host command used to disable the reader.

ASCII characters or any hex value from 0 to 0xFF can be selected.



NOTE: Setting to previously defined characters such as XON, XOFF, or host commands conflicts with normal operation of these characters. 8-bit data is not recognized when the option "Data Bits" on page 42 has been set as 7 Data Bits.

To set the value:

1. Determine the desired character or value. A setting of 0xFF indicates the Disable Character is not used (not available).
2. Use the ASCII Chart on page 368 to find the hex equivalent for the desired character/value.
3. Scan the ENTER/EXIT PROGRAMMING MODE bar code to enter Programming Mode.
4. Scan the bar code: SELECT DISABLE CHARACTER SETTING on page 52.
5. Scan the appropriate two alphanumeric characters from the keypad in Appendix D, that represent the desired character/value determined above. The second character will cause a two-beep indication.
6. Scan the ENTER/EXIT PROGRAMMING MODE bar code to exit Programming Mode.

This completes the procedure. See the table below for examples of how to set this feature.

Table 9 -Disable Character Setting Examples

STEP	ACTION	EXAMPLES			
1	**Desired character/value**	'd'	'}'	'D'	Disable Command Not Used
2	**Hex equivalent from ASCII Chart on** page 368	0x64	0x7D	0x44	0xFF
3	**Scan ENTER/EXIT PROGRAMMING MODE**				
4	**Scan SELECT DISABLE CHARACTER VALUE SETTING**				
5	**Scan three characters from** Appendix D	'6' and '4'	'7' and 'D'	'4' and '4'	'F' and 'F'
6	**Scan ENTER/EXIT PROGRAMMING MODE**				

Enable Character

Specifies the value of the RS-232 host command used to enable the reader.

ASCII characters or any hex value from 0 to 0xFF can be selected.



NOTE: Setting to previously defined characters such as XON, XOFF, or host commands conflicts with normal operation of these characters. 8-bit data is not recognized when the option "Data Bits" on page 42 has been set as 7 Data Bits.

To set the value:

1. Determine the desired character or value. A setting of 0xFF indicates the Enable Character is not used (not available).
2. Use the ASCII Chart in Appendix G to find the hex equivalent for the desired character/value.
3. Scan the ENTER/EXIT PROGRAMMING MODE bar code to enter Programming Mode.
4. Scan the bar code: SELECT ENABLE CHARACTER SETTING on page 52.
5. Scan the appropriate two alphanumeric characters from the keypad in Appendix D, that represent the desired character/value determined above. The second character will cause a two-beep indication.
6. Scan the ENTER/EXIT PROGRAMMING MODE bar code to exit Programming Mode.

This completes the procedure. See the table below for examples of how to set this feature.

Table 10 - Enable Character Setting Examples

STEP	ACTION	EXAMPLES			
1	**Desired character/value**	‘e’	‘}’	‘E’	Enable Command Not Used
2	**Hex equivalent from ASCII Chart on page 368**	0x65	0x7D	0x45	0xFF
3	**Scan ENTER/EXIT PROGRAMMING MODE**				
4	**Scan SELECT ENABLE CHARACTER VALUE SETTING**				
5	**Scan two characters from** Appendix D	‘6’ and ‘5’	‘7’ and ‘D’	‘4’ and ‘5’	‘F’ and ‘F’
6	**Scan ENTER/EXIT PROGRAMMING MODE**				

DATA FORMAT

Data Editing

When a bar code is scanned, additional information can be sent to the host computer along with the bar code data. This combination of bar code data and supplementary user-defined data is called a “message string.” The Data Editing features can be used to build specific user-defined data into a message string.

There are several types of selectable data characters that can be sent before and after scanned data. You can specify if they should be sent with all symbologies, or only with specific symbologies. The following shows the available elements you can add to a message string:

Figure 18 - Breakdown of a Message String

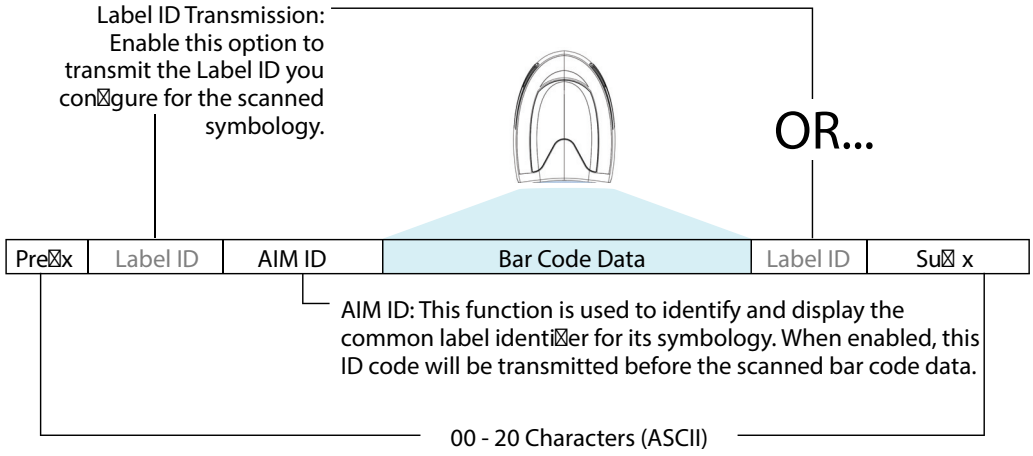

NOTE: Additional advanced editing is available. See the Advanced formatting features in the Datalogic Aladdin configuration software, or contact "Technical Support" on page xiv **for more information.**

Please Keep In Mind...

- Modifying a message string is not a mandatory requirement. Data editing is a sophisticated feature allowing highly customizable output for advanced users. Factory default settings for data editing is typically set to NONE.
- A prefix or suffix may be applied only to a specified symbology (reference 1D Symbologies, starting on page 121) or across all symbologies (set via the Global features in Configuration with Bar Codes, starting on page 37).
- You can add any character from the ASCII Chart on page 368 (from 00-FF) on the inside back cover of this manual as a prefix, suffix or Label ID.
- Enter prefixes and suffixes in the order in which you want them to appear on the output.

Global Prefix/Suffix

Up to 20 ASCII characters may be added as a prefix (in a position before the bar code data) and/or as a suffix (in a position following the bar code data) as indicated.

Figure 19 Prefix and Suffix Positions

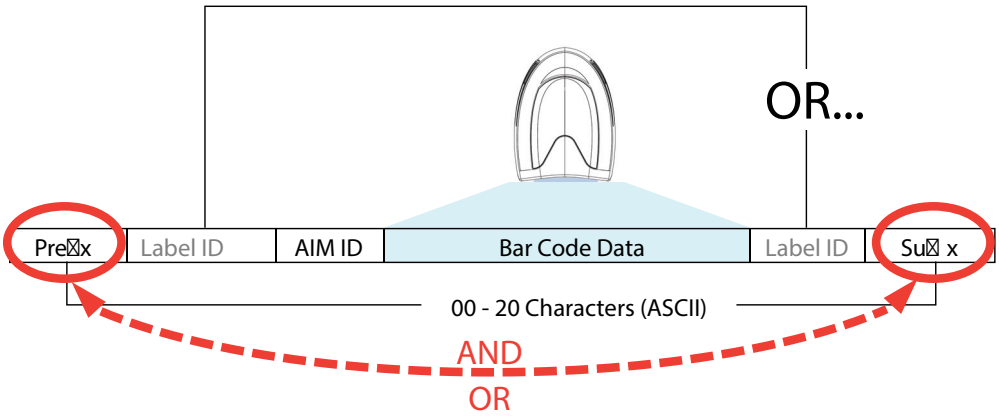

Example: Setting a Prefix

In this example, we'll set a prefix for all symbologies.

1. Determine which ASCII character(s) are to be added to scanned bar code data. In this example, we'll add a dollar sign ('$') as a prefix.
2. Scan the ENTER/EXIT PROGRAMMING MODE bar code, then scan the SET GLOBAL PREFIX bar code.
3. Reference the ASCII Chart on page 368 in Appendix G to find the hex value assigned to the desired character. The corresponding hex number for the '$' character is 24. To enter this selection code, scan the '2' and '4' bar codes from Appendix D.

NOTE: If you make a mistake before the last character, scan the CANCEL bar code to abort and not save the entry string. You can then start again at the beginning.

4. If less than the expected string of 20 characters are selected, scan the ENTER/EXIT bar code to terminate the string.
5. Scan the ENTER/EXIT bar code once again to exit Programming Mode.

The resulting message string would appear as follows:

Scanned bar code data: **12345**

Resulting message string output: **$12345**

Global AIM ID

NOTE: This feature enables/disables addition of AIM IDs for all symbology types.

AIM label identifiers (as opposed to custom characters you select yourself as with label identifiers) can be included with scanned bar code data. AIM label identifiers consist of three characters as follows:

- A close brace character (ASCII ‘]’), followed by...
- A code character (see the table below), followed by...
- A modifier character (the modifier character is symbol dependent).

SYMBOLOGY	CHAR	SYMBOLOGY	CHAR
UPC/EAN	E[a]	Code 128/GS1-128	C
Code 39 and Code 32	A	DataBar Omnidirectional, DataBar Expanded	e
Codabar	F	Standard 2 of 5	S
Interleaved 2 of 5	I	ISBN	X[b]
Code 93	G	Code 11	H

a. UPC-A and UPC-E labels are converted to EAN 13 when adding AIM IDs.
b. ISBN (X with a 0 modifier character)

Figure 20 AIM ID

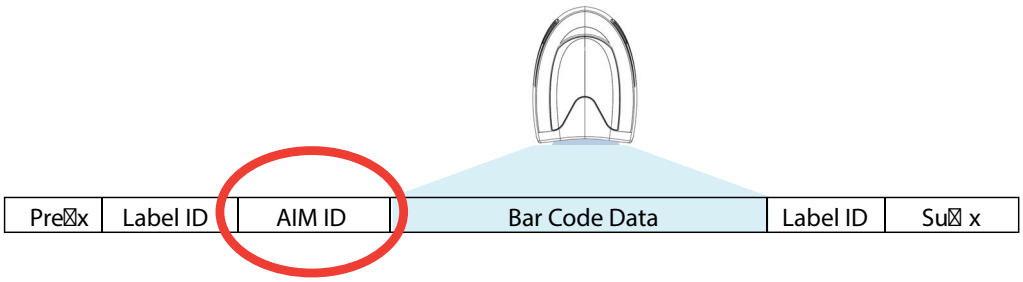

Label ID

A Label ID is a customizable code of up to three ASCII characters (each can be one of hex 0x01-0xFF), used to identify a bar code (symbology) type. It can be appended previous to or following the transmitted bar code data depending upon how this option is enabled. This feature provides options for configuring custom Label IDs as a pre-loaded set or individually per symbology (see "Label ID: Set Individually Per Symbology" on page 88). If you wish to program the reader to always include an industry standard label identifier for ALL symbology types, see "Global AIM ID" on page 86.

Label ID: Pre-loaded Sets

The following table lists the pre-loaded label ID sets for the USA and Europe.



NOTE: Values must be entered using Appendix D barcode encoding (ASCII/ hexadecimal), not as direct decimal digits.

Table 11 - Label ID Pre-loaded Sets

SYMBOLOGY	USA LABEL ID SET		EU LABEL ID SET	
1D Symbologies	ASCII character	Hex value	ASCII character	Hexadecimal value
ABC Codabar	S	530000	S	530000
CODABAR	%	250000	R	520000
Code 39 CIP HR	Y	590000	Y	590000
Code 93	&	260000	U	550000
Code 11	CE	434500	b	620000
Code 128	#	230000	T	540000
Code 32	A	410000	X	580000
Code 39	*	2A0000	V	560000
Datalogic 2of5	s	730000	s	730000
EAN13	F	460000	B	420000
EAN13 P2	F	460000	L	4C0000
EAN13 P5	F	460000	M	4D0000
EAN8	FF	464600	A	410000
EAN8 P2	FF	464600	J	4A0000
EAN8 P5	FF	464600	K	4B0000
FOLLETT 2OF5	O	4F0000	O	4F0000
GS1 DATABAR EXPANDED	RX	525800	t	740000
GS1 DATABAR LIMITED	RL	524C00	v	760000
GS1 DATABAR OMNIDIRECTIONAL	R4	523400	u	750000
GS1-128		000000	k	6B0000
I2OF5	i	690000	N	4E0000
IATA	IA	494100	&	260000

SYMBOLOGY	USA LABEL ID SET		EU LABEL ID SET	
Industrial 2 of 5	W	570000	W	570000
Interleaved 2 of 5	e	650000	e	650000
ISBN	l	490000	@	400000
ISBT128	f	660000	f	660000
ISSN	n	6E0000	n	6E0000
MSI	@	400000	Z	5A0000
S25	s	730000	P	500000
UPCA	A	410000	C	430000
UPCA P2	A	410000	F	460000
UPCA P5	A	410000	G	470000
UPCE	E	450000	D	440000
UPCE P2	E	450000	H	480000
UPCE P5	E	450000	I	490000
OCR-A	o	6F0000	$o	246F00
OCR-B	o	6F0000	$p	247000
MICR	o	6F0000	$m	246D00
2D Symbologies	ASCII character	Hex value	ASCII character	Hexadecimal value
AZTEC	417A00	Az	210000	!
CHINA SENSIBLE CODE	245300	$S	245300	$S
DATAMATRIX	446D00	Dm	770000	w
GS1 DATAMATRIX	246400	Dg	247700	$w
GS1 DOTCODE	4D4300	$d	246400	$d
MAXICODE	500000	MC	780000	x
PDF417	6D5000	P	720000	r
MICRO PDF 417	515200	mP	380000	8
QRCODE	245100	QR	790000	y
MICROQR	000000	$Q	245100	$Q
UCC COMPOSITE	446700		244500	$E

Label ID: Set Individually Per Symbology

To configure a Label ID individually for a single symbology:

1. Scan the ENTER/EXIT bar code.
2. Select Label ID position as either BEFORE (Enable as Prefix) or AFTER (Enable as suffix) by scanning the appropriate bar code in the section "Label ID Control" on page 88. Reference Figure 21 for Label ID positioning options if multiple identification features are enabled.
3. Scan a bar code to select the symbology for which you wish to configure a custom Label ID from the section "Label ID Symbology Selection" on page 89.
4. Determine the desired character(s) (you may choose up to three) which will represent the Label ID for the selected symbology.
5. Turn to the ASCII Chart on page 368 on the inside back cover of this manual and find the equivalent hex digits associated with your choice of Label ID. For example, if you wish to select an equal sign (=) as a Label ID, the chart indicates its associated hex characters as 3D. Turn to Keypad, in Appendix D, and scan the bar codes representing the hex characters determined. For the example given, the characters '3' and 'D' would be scanned. More examples of Label ID settings are provided in Table 12 on page 292.

NOTE: If you make a mistake before the last character, scan the CANCEL bar code to abort and not save the entry string. You can then start again at the beginning.

6. Scan the ENTER/EXIT bar code to exit Label ID entry.
7. Scan the ENTER/EXIT bar code once again to exit Programming Mode.

This completes the steps to configure a Label ID for a given symbology.

Figure 21 Label ID Position Options

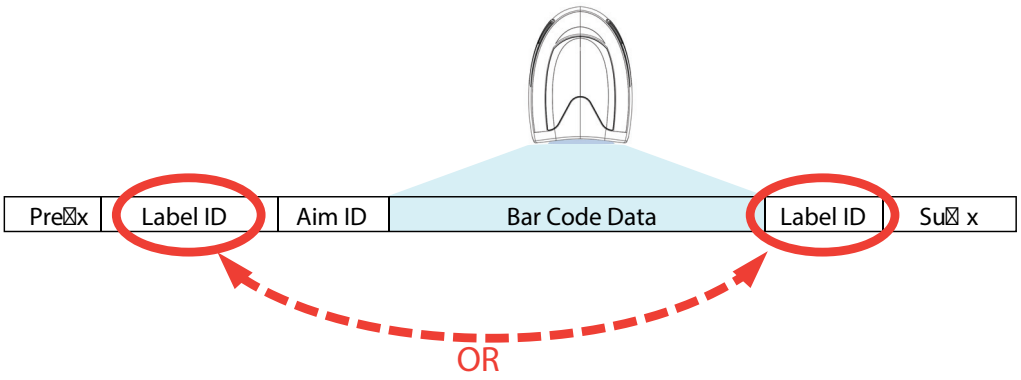

Label ID: Set Individually Per Symbology — continued

Table 12 Label ID Examples

STEP	ACTION	EXAMPLES			
1	Scan the ENTER/EXIT bar code	(Reader enters Programming Mode)			
2	Determine placement of the Label ID characters BEFORE or AFTER with regard to scanned data using Label ID Control, starting on page 88	Enable as Prefix	Enable as Suffix	Enable as Prefix	Enable as Suffix
3	Scan the bar code selecting the symbology type you wish to designate label ID characters for using Label ID Symbology Selection, starting on page 89	GS1 DataBar Omnidirectional	Code 39	Interleaved 2 of 5	Code 32
4	Custom Label ID example (desired characters):	D B *	= C 3	+	PH
5	Find hex equivalents from the ASCII table (inside back cover), then scan in these digits/characters using the bar codes in the section: Keypad, starting on page 343. f you make a mistake before the last character, scan the CANCEL bar code to abort and not save the entry string. You can then start again at the beginning.	44 42 2A	3D 43 33	2B	50 48
6	Scan the ENTER/EXIT bar code	(Reader exits Label ID entry)			
7	Scan the ENTER/EXIT bar code once again	(Reader exits Programming Mode)			
Result:		DB*[bar code data]	[bar code data]=C3	+[bar code data]	[bar code data]PH

Character Conversion

Character conversion is an eight byte configuration item. The eight bytes are 4 character pairs represented in hexadecimal ASCII values. The first character in the pair is the character that will be converted. The second character in the pair is the character to convert to. If the character to convert in a pair is FF, then no conversion is done.

For example, if you have the character conversion configuration item set to the following: 41423132FFFFFFFF

The first pair is 4142 or AB (41 hex is an ASCII capital A, 42 hex is an ASCII capital B) and the second pair is 3132 or 12 (31 hex is an ASCII 1, 32 is an ASCII 2). The other two pairs are FFFF and FFFF.

With the label, AB12BA21, it would look as follows after the character

conversion: BB22BB22.

The A characters were converted to B characters and the 1 characters were converted to 2 characters. Nothing is done with the last two character pairs, since they are all FF.

To set Character Conversion:

1. Scan the ENTER/EXIT bar code.
2. Scan the bar code for "Character Conversion" on page 85
3. Determine the desired string. Sixteen positions must be determined as in the above example. Next, turn to the ASCII Chart on page 368 on the inside back cover of this manual and find the equivalent hex digits needed to fulfill the string.
4. Turn to Appendix D, Keypad and scan the bar codes representing the hex characters determined in the previous step.
5. Scan the ENTER/EXIT bar code to exit Programming Mode.



NOTE: If less than the expected string of 16 characters are selected, scan the ENTER/EXIT bar code twice to accept the selections and exit Programming Mode.

SCANNING FEATURES

Scan Mode

Selects the scan operating mode for the reader. Selections are:

Trigger Single: When the trigger is pulled, scanning is activated until one of the following occurs:

- Stand Mode/Object Detection has elapsed
- a label has been read
- the trigger is released

This mode is associated with typical handheld reader operation: when the trigger is pulled, scanning starts and the product scans until the trigger is released, or a label is read, or the maximum Stand Mode/Object Detection has elapsed.

Trigger Hold Multiple: When the trigger is pulled, scanning starts and the product scans until the trigger is released or Stand Mode/Object Detection has elapsed. Reading a label does not disable scanning. Double Read Timeout prevents undesired multiple reads of the same label while in this mode.

Trigger Pulse Multiple: When the trigger is pulled, continuous scanning is activated until Stand Mode/Object Detection has elapsed or the trigger has been released and pulled again. Double Read Timeout prevents undesired multiple reads of the same label while in this mode.

Flashing: The reader flashes[1] on and off regardless of the trigger status. Flash rate is controlled by Flash On Time and Flash Off Time. When Flash is ON the reader reads continuously. When Flash is OFF scanning is deactivated.

Always On: No trigger pull is required to read a bar code. Scanning is continually on. Double Read Timeout prevents undesired multiple reads of the same label while in this mode.

Stand Mode/Object Detection: No trigger pull is required to read a bar code. Scanning turns on automatically when an item is placed in reader's field of view. While in a stand watch state, the reader illumination LED goes from dim to maximum bright.

1. Controlled by Flash On Time.

Scanning Active Time

This setting specifies the amount of time that the reader stays in scan ON state once the state is entered. The range for this setting is from 1 to 255 seconds in 1-second increments.

Follow these instructions to set this feature:

1. Determine the desired setting.
2. Pad the result with leading zeroes to yield three digits. For example: 0 = 000, 5 = 005, 20 = 020, etc.
3. Scan the ENTER/EXIT PROGRAMMING MODE bar code to enter Programming Mode.
4. Scan the bar code: SELECT SCANNING ACTIVE TIME SETTING on page 96.
5. Scan the appropriate three digits from the keypad in Appendix D, that represent the duration which was determined in the steps above. You will hear a two-beep indication after the last character.



NOTE: If you make a mistake before the last character, scan the CANCEL bar code to abort and not save the entry string. You can then start again at the beginning.

6. Scan the ENTER/EXIT PROGRAMMING MODE bar code to exit Programming Mode.

This completes the procedure. See the table below for examples of how to set this feature.

Table 13 Scanning Active Time Setting Examples

STEP	ACTION	EXAMPLES			
1	**Desired Setting**	1 Second	90 Sec. (1.5 min.)	180 Sec. (3 min.)	255 Seconds (4.25 min.)
2	**Pad leading zero(es)**	001	090	180	255
3	**Scan ENTER/EXIT PROGRAMMING MODE**				
4	**Scan SELECT SCANNING ACTIVE TIME SETTING**				
5	**Scan three characters from** Appendix D	'0', '0' and '1'	'0', '9' and '0'	'1', '8' and '0'	'2', '5' and '5'
6	**Scan ENTER/EXIT PROGRAMMING MODE**				

Aiming Duration Time

Specifies the frame of time the aiming pointer remains on after decoding a label, when in trigger single mode. The range for this setting is from 1 to 255 seconds in 1-second increments.

Follow these instructions to set this feature:

1. Determine the desired setting.
2. Pad the result with leading zeroes to yield three digits. For example: 0 = 000, 5 = 005, 20 = 020, etc.
3. Scan the ENTER/EXIT PROGRAMMING MODE bar code to enter Programming Mode.
4. Scan the bar code: SELECT AIMING DURATION TIME SETTING.
5. Scan the appropriate two digits from the keypad in Appendix D, that represent the duration which was determined in the steps above. You will hear a two-beep indication after the last character.



NOTE: If you make a mistake before the last character, scan the CANCEL bar code to abort and not save the entry string. You can then start again at the beginning.

6. Scan the ENTER/EXIT PROGRAMMING MODE bar code to exit Programming Mode.

This completes the procedure. See the following table for some examples of how to set this feature.

Table 14 Aiming Duration Time Setting Examples

STEP	ACTION	EXAMPLES			
1	**Desired Setting**	1 Second	90 Sec. (1.5 min.)	180 Sec. (3 min.)	255 Seconds (4.25 min.)
2	**Pad leading zero(es)**	001	090	180	255
3	**Scan ENTER/EXIT PROGRAMMING MODE**				
4	**Scan SELECT AIMING DURATION TIME SETTING**				
5	**Scan three characters from** Appendix D	'0', '0' and '1'	'0', '9' and '0'	'1', '8' and '0'	'2', '5' and '5'
6	**Scan ENTER/EXIT PROGRAMMING MODE**				

Flash On Time

This feature specifies the ON time for the indicator LED while in Flash Mode. The selectable range is 100 to 9,900 milliseconds (0.1 to 9.9 seconds), in 100 millisecond increments.

Follow these instructions to set this feature.

1. Determine the desired setting in milliseconds.
2. Divide the desired setting by 100 (setting is in 100ms increments). Pad the result with leading zeroes to yield two digits. For example: 0 = 00, 5 = 05, 20 = 20, etc.
3. Scan the ENTER/EXIT PROGRAMMING MODE bar code to enter Programming Mode.
4. Scan the bar code: SELECT FLASH ON TIME SETTING on page 96.
5. Scan the appropriate two digits from the keypad in Appendix D, that represent the duration which was determined in the steps above. You will hear a two-beep indication after the last character.



NOTE: If you make a mistake before the last character, scan the CANCEL bar code to abort and not save the entry string. You can then start again at the beginning.

6. Scan the ENTER/EXIT PROGRAMMING MODE bar code to exit Programming Mode.

This completes the procedure. See the following table for examples of how to set this feature.

Table 15 Flash On Time Setting Examples

STEP	ACTION	EXAMPLES			
1	**Desired Setting**	500ms	1,000ms (1 sec.)	5200ms (5.2 sec.)	9,900ms (9.9 sec.)
2	**Divide by 100 (and pad with leading zeroes to yield two digits)**	05	10	52	99
3	**Scan ENTER/EXIT PROGRAMMING MODE**				
4	**Scan SELECT FLASH ON TIME SETTING**				
5	**Scan two characters from** Appendix D	‘0’ and ‘5’	‘1’ and ‘0’	‘5’ and ‘2’	‘9’ and ‘9’
6	**Scan ENTER/EXIT PROGRAMMING MODE**				

Flash Off Time

This feature specifies the OFF time for the indicator LED while in Flash Mode. The selectable range is 100 to 9,900 milliseconds (0.1 to 9.9 seconds), in 100 millisecond increments.

Follow these instructions to set this feature.

1. Determine the desired setting in milliseconds.
2. Divide the desired setting by 100 (setting is in 100ms increments). Pad the result with leading zeroes to yield two digits. For example: 0 = 00, 5 = 05, 20 = 20, etc.
3. Scan the ENTER/EXIT PROGRAMMING MODE bar code to enter Programming Mode.
4. Scan the bar code: SELECT FLASH OFF TIME SETTING on page 97.
5. Scan the appropriate two digits from the keypad in Appendix D, that represent the duration which was determined in the steps above. You will hear a two-beep indication after the last character.



NOTE: If you make a mistake before the last character, scan the CANCEL bar code to abort and not save the entry string. You can then start again at the beginning.

6. Scan the ENTER/EXIT PROGRAMMING MODE bar code to exit Programming Mode.

This completes the procedure. See the following table for examples of how to set this feature.

Table 16 Flash Off Time Setting Examples

STEP	ACTION	EXAMPLES			
1	**Desired Setting**	500ms	1,000ms (1 sec.)	5200ms (5.2 sec.)	9,900ms (9.9 sec.)
2	**Divide by 100 (and pad with leading zeroes to yield two digits)**	05	10	52	99
3	**Scan ENTER/EXIT PROGRAMMING MODE**				
4	**Scan SELECT FLASH OFF TIME SETTING**				
5	**Scan two characters from** Appendix D	‘0’ and ‘5’	‘1’ and ‘0’	‘5’ and ‘2’	‘9’ and ‘9’
6	**Scan ENTER/EXIT PROGRAMMING MODE**				

LED AND BEEPER INDICATORS

Good Read LED Duration

This feature specifies the amount of time that the Good Read LED remains on following a good read. The good read LED on time can be set within a range of 10 milliseconds to 2,550 milliseconds (0.001 to 2.55 seconds) in 100ms increments.

Follow these instructions to set this feature:

1. Determine the desired setting in milliseconds. A setting of 0 means that the good read LED stays on until the next time the trigger is pulled.
2. Divide the desired setting by 10 (setting is in 100ms increments). Pad the result with leading zeroes to yield three digits. For example: 0 = 000, 5 = 000, 20 = 020, etc.
3. Go to page 110 and scan the ENTER/EXIT PROGRAMMING MODE bar code to enter Programming Mode.
4. Scan the bar code: SELECT GOOD READ LED DURATION SETTING.
5. Scan the appropriate two digits from the keypad in Appendix D, that represent the duration which was determined in the steps above. You will hear a two-beep indication after the last character.



NOTE: If you make a mistake before the last character, scan the CANCEL bar code to abort and not save the entry string. You can then start again at the beginning.

6. Scan the ENTER/EXIT PROGRAMMING MODE bar code to exit Programming Mode.

This completes the procedure. See the following table for some examples of how to set this feature.

Table 17 Good Read LED Duration Setting Example

STEP	ACTION	EXAMPLES			
1	**Desired Setting**	Good Read LED stays on until next trigger pull (00)	20ms	150ms	2550ms (2.55 sec.)
2	**Divide by 10 (and pad with leading zeroes)**	000	002	015	255
3	**Scan ENTER/EXIT PROGRAMMING MODE**				
4	**Scan SELECT GOOD READ LED DURATION SETTING**				
5	**Scan three characters from** Appendix D	'0', '0' and '0'	'0', '0' and '2'	'0', '1' and '5'	'2', '5' and '5'
6	**Scan ENTER/EXIT PROGRAMMING MODE**				

RF FEATURES

Automatic Configuration Update

When this feature is enabled, the base station and reader will keep their configurations synchronized. If a reader's configuration is altered by reading programming labels, this change is automatically transferred and updated in a linked base station. Likewise, if the base station's configuration is changed using Aladdin or by host commands, then the reader's configuration will automatically be updated if this feature is enabled.

RF Address Stamping

Source Radio Address Delimiter Character

This option specifies the delimiter character to be placed between the label data and radio address when address stamping is enabled.



NOTE: This feature only applies if "Source Radio Address Transmission" on page 265 **is enabled**

Follow these instructions to select the delimiter character:

1. Determine the desired character, then find its hexadecimal equivalent on the ASCII Chart on page 368. A setting of 00 specifies no delimiter character.
2. Scan the ENTER/EXIT PROGRAMMING MODE bar code to enter Programming Mode.
3. Scan the bar code: SET SOURCE RADIO ADDRESS DELIMITER CHARACTER.
4. Scan the appropriate two digits from the keypad in Appendix D, that represent the hexadecimal characters which were determined in the steps above. You will hear a two-beep indication after the last character.



NOTE: If you make a mistake before the last character, scan the CANCEL bar code to abort and not save the entry string. You can then start again at the beginning.

5. Scan the ENTER/EXIT PROGRAMMING MODE bar code to exit.

Table 18 Source Radio Address Delimiter Character Setting Examples

STEP	ACTION	EXAMPLES			
1	**Desired Setting**	No delimiter character	, (comma)	- (dash)	/ (slash)
2	**Scan ENTER/EXIT PROGRAMMING MODE**				
3	**Scan SET SOURCE RADIO ADDRESS DELIMiTER CHARACTER**				
4	**Scan Two Characters From** Appendix D	'0' and '0'	'2' and 'C'	'2' and 'D'	'2' AND 'F'
5	**Scan ENTER/EXIT PROGRAMMING MODE**				

STAR Radio Protocol Timeout

This parameter sets the valid wait time before transmission between the handheld reader and Base Station is considered failed.

When setting this parameter, take into consideration the radio traffic (number of readers in the same area). The selectable range for this feature is from 02 to 25 seconds.

Follow these instructions to set this feature:

1. Determine the desired setting.
2. Pad the number with leading zeroes to yield two digits. For example: 2 = 02, 5 = 05, 25 = 25, etc
3. Scan the ENTER/EXIT PROGRAMMING MODE barcode to enter Programming Mode.
4. Scan the barcode: SELECT RADIO PROTOCOL TIMEOUT.
5. Scan the appropriate two digits from the keypad in Appendix D, that represent the duration which was determined in the steps above. You will hear a two-beep indication after the last character.



NOTE: If you make a mistake before the last character, scan the CANCEL bar code to abort and not save the entry string. You can then start again at the beginning.

6. Scan the ENTER/EXIT PROGRAMMING MODE barcode to exit Programming Mode.

This completes the procedure. See following table for some examples of how to set this feature.

Table 19 STAR Radio Protocol Timeout Examples

STEP	ACTION	EXAMPLES			
1	**Desired Setting**	2 Seconds	5 Seconds	10 Seconds	25 Seconds
2	**Pad with leading zero(es)**	2	5	10	25
3	**Scan ENTER/EXIT PROGRAMMING MODE**				
4	**Scan SELECTSTAR RADIO PROTOCOL TIMEOUT SETTING**				
5	**Scan two characters from** Appendix D	‘0’ and ‘2’	‘0’ and ‘5’	‘1’ and ‘0’	‘2’ AND ‘5’
5	**Scan ENTER/EXIT PROGRAMMING MODE**				

SYMBOLOGIES

Set Length

Length Control allows you to select either variable length decoding or fixed length decoding for the specified symbology.

Variable Length: For variable length decoding, a minimum and maximum length may be set.

Fixed Length: For fixed length decoding, two different lengths may be set.

Set Length 1

This feature specifies one of the bar code lengths for a given symbology. Length 1 is the minimum label length if in Variable Length Mode, or the first fixed length if in Fixed Length Mode.

Reference the 1D Symbologies, starting on page 121 to view the selectable range (number of characters) for the symbology being set.

Follow these instructions to set this feature:

1. Determine the desired character length. Pad the number with leading zeroes to yield two digits. For example: 0 = 00, 5 = 05, 20 = 20, etc.
2. Scan the ENTER/EXIT PROGRAMMING MODE bar code to enter Programming Mode.
3. Scan the “Select Length 1 Setting” for the symbology being set.
4. Scan the appropriate two digits from the keypad in Appendix D, that represent the length setting which was determined in the steps above. You will hear a two-beep indication after the last character.



NOTE: If you make a mistake before the last character, scan the CANCEL bar code to abort and not save the entry string. You can then start again at the beginning.

5. Scan the ENTER/EXIT PROGRAMMING MODE bar code to exit Programming Mode.

This completes the procedure. See the following table for examples of how to set this feature.

Table 20 Length 1 Setting Examples

STEP	ACTION	EXAMPLES			
1	**Desired Setting**	01 Character	07 Character	52 Character	74 Character
2	**Scan ENTER/EXIT PROGRAMMING MODE**				
3	**Scan SELECT LENGTH 1 SETTING for the desired symbology**				
4	**Scan two characters from** Appendix D	‘0’ and ‘1’	‘0’ and ‘7’	‘5’ and ‘2’	‘7’ AND ‘4’
5	**Scan ENTER/EXIT PROGRAMMING MODE**				

Set Length 2

This feature specifies one of the bar code lengths for a given symbology. Length 2 is the maximum label length if in Variable Length Mode, or the second fixed length if in Fixed Length Mode.

Reference the 1D Symbologies, starting on page 121 to view the selectable range (number of characters) for the symbology being set. A setting of 00 specifies to ignore this length (only one fixed length).

Follow these instructions to set this feature:

1. Determine the desired character length. Pad the number with leading zeroes to yield two digits. For example: 0 = 00, 5 = 05, 20 = 20, etc.
2. Scan the ENTER/EXIT PROGRAMMING MODE bar code to enter Programming Mode.
3. Scan the “Select Length 2 Setting” for the symbology being set.
4. Scan the appropriate two digits from the keypad in Appendix D, that represent the length setting which was determined in the steps above. You will hear a two-beep indication after the last character.



NOTE: If you make a mistake before the last character, scan the CANCEL bar code to abort and not save the entry string. You can then start again at the beginning.

5. Scan the ENTER/EXIT PROGRAMMING MODE bar code to exit Programming Mode.

This completes the procedure. See the following table for examples of how to set this feature.

Table 21 Length 2 Setting Examples

STEP	ACTION	EXAMPLES			
1	**Desired Setting**	00 (ignore second length)	07 Character	52 Character	74 Character
2	**Scan ENTER/EXIT PROGRAMMING MODE**				
3	**Scan SELECT LENGTH 2 SETTING**				
4	**Scan two characters from** Appendix D	‘0’ and ‘0’	‘0’ and ‘7’	‘5’ and ‘2’	‘7’ AND ‘4’
5	**Scan ENTER/EXIT PROGRAMMING MODE**				

CHAPTER 5
MESSAGE FORMATTING

MESSAGE FROM HOST TO DEVICE

The format of the ACK from Host message (used for transmission mode 02) is:

[Scanner_Addr] [Scanner_Addr_delimiter] MESSAGE <CR>

- Synchronous messages are supported only by the mobile models.

The format of a generic message From Host to HH is:

[Scanner_Addr] [Scanner_Addr_delimiter] DC2 MESSAGE <CR>

where DC2 is ASCII 0x12 (^R) character.

[Items in square brackets are optional.]

- Asynchronous messages are supported by all the Gryphon 4600 models.



NOTE: Messages are supported by all the Gryphon 4600 models.

A message from the Host to the Gryphon must follow these rules:

- Message could be sent to the HH in response to a Label when “Transmit mode” is set to Ack from Host (see transmit mode parameter). In this case “Host Commands Obey/Ignore” must set to Ignore.
- Address stamping is necessary to correctly route the message to the Gryphon 4600, it is mandatory when more than one handheld is linked to the same base. Address stamping could be disabled if the system is in point-to-point configuration.
- If Address stamping options or address delimiter are enabled on the base, the Host replay must have address field and delimiter too, otherwise the message willbe ignored. Address delimiter is present only when address stamping is enabled.
- The maximum character length for messages is 200.
- Messages end with “CR” 0x0D ASCII character. The CR character cannot be contained in the middle.
- Messages cannot start with '$' or # because these are reserved for Service mode command
- Base station can receive host message only if Host Commands Obey/Ignore is set to Ignore.

- Message could be sent to the HH in response to a Label when “Transmit mode” require Ack from Host (see transmit mode parameter) or at any time. When messages are sent not in response to a label must start with DC2 0x12 ASCII character and could be sent in any transmit mode setting.
- Message could be sent to all HH linked to base by using a Multicast message: “00 00 00 00 2A AA”
- If you want to control the reader's beeper from the host, you will also probably want to disable the good transmission beep that is emitted when the code is received from the base station. (See "Wireless Features" on page 253).

LED AND BEEPER CONTROL

The LED control escape sequences are intended to activate the LEDs for short periods of time and can be used in combination with the Beeper. The LED and Beeper will be controlled by the system after the entire command sequence is interpreted.

ESC SEQUENCE	ACTION
Esc [0 q	Emit short High tone + short delay
Esc [0 v	
Esc [1 q	Emit short Low tone + short delay
Esc [2 q	Emit long Low tone + short delay
Esc [3 q	Emit good read tone
Esc [4 q	Emit bad tx tone
Esc [5 q	Wait 100 msec
Esc [6 q	Turn on the green LED
Esc [7 q	Turn off the green LED
Esc [0 r	Beep for Find me function (new)
Esc [1 r	Power-off (new)
Esc [2 r	Turn on the green spot
Esc [3 r	Turn off the green spot
Esc [4 r	Turn on the red led.
Esc [5 r	Turn off the red led.

Example:

Esc [6 q Esc [3 q Esc [7 q	Turns on the green LED, emits a good read tone, and turns off the green LED.
Esc [6 q Esc [5 q Esc [7 q	Turns on the green LED for 100 msec and then turns off the green LED.
Esc [4 r	The device shall turn on the red led.
Esc [5 r	The device shall turn off the red led.

Escape sequences different from those listed will be ignored.

APPENDIX A
TECHNICAL SPECIFICATIONS

The table below contains Physical and Performance Characteristics, User Environment and Regulatory information. Table 29 provides Standard Cable Pinouts.

GD4600 TECHNICAL SPECIFICATIONS

Table 22 - GD4600 Technical Specifications

PHYSICAL CHARACTERISTICS	
Color	Black White
Dimensions	Height 110,2 mm (4.34") Length 165,6 mm (3.1") Width 64,7 mm (6.52") Corded models with presentation mode base: Height 182,3 mm (7.18") Length (mid-tilt position) 169,5 mm (6.67")[a] Width 75,1 mm (2.96")
Weight (without cable)	GD4600 approx. 144 g / 5.1 oz GD4600 with presentation mode base 426 g / 15.0 oz
ELECTRICAL CHARACTERISTICS	
Input Voltage	GD4690 (HP models): 4,5 - 14,0 VDC +/- 5% GD4620 (HD models): 5 VDC +/- 5%
Consumption	Operating: <300 mA @ 5V; < 150 mA @ 12V Standby/Idle: < 70 mA @ 5V; <40 mA @ 12V
Max. Scan Rate	60 frames/sec
Reading Indicators	Beeper (adjustable tone); Good-read feedback: Datalogic 'Green Spot' on the Code; Good-read LED
ENVIRONMENTAL CHARACTERISTICS	
Operating Temperature	0 °C to + 50 °C (+32° F to +122 °F)
Storage Temperature	-40 °C to + 70 °C (-40 ° F to +158 °F)
Humidity	95% non condensing
Drop Resistance	IEC 68-2-32 Tested 1.8 m (6 ft)

ESD Protection	16 KV
Tumble Specification	Designed to withstand 2,000 1.5 ft./0.5 m tumbles
Trigger Resistance	Withstands 10 Mhits
Protection Class	IP52
Cable Length	Refer to www.datalogic.com
OPTICAL CHARACTERISTICS	
Imager Sensors	High Performance models (HP, dual sensor): 1.5 Megapixel (1360 x 1120 pixels) + VGA (640 x 600 pixels) High Density models (HD, single sensor): 1.5 Megapixel (1360 x 1120 pixels)
Illumination System	Illumination: dual color Warm White and Hyper Red LED (user selectable) IEC 62471 Exempt Risk Group
Aiming System	LED Green central cross IEC 62471 Exempt Risk Group
Ambient Light	Up to 110,000 lux
Tilt Tolerance[b]	0° - 360°
Pitch Tolerance[a]	+/- 65°
Skew Tolerance[a]	+/- 65°
Field of View[a]	HP: dual sensor (47° x 40° and 22° x 20°) HD: single sensor (47° x 40°)
PCS (Datalogic Test Chart)	minimum 15%
Motion Tolerance	70 IPS
Max Scan Rate	60 frames/sec

a. When the gun is tilted forward, the maximum overall length is 185mm.
b. Based on ISO 15423 specifications

GBT/GM4600 TECHNICAL SPECIFICATIONS

Table 23 - GBT/GM4600 Technical Specifications

PHYSICAL CHARACTERISTICS	
Color	Black White
Dimensions	Gun only: Height 110,2 mm (4.34") Length 165,6 mm (3.1") Width 64,7 mm (6.52") Cradle only: Height 93 mm (3.66") Length 203,1 mm (7.99") Width 84,3 mm (3.31")
Weight	Approx. 218 g (7.7 oz.) gun and battery pack included Battery Pack is approx. 65 g (2.29 oz.) Super Cap Pack is approx. 41g (1.4 oz.)
ELECTRICAL CHARACTERISTICS	
Power Supply	GBT/GM4600: 5V to 14V +/-5% in the Communication Port 5V to 14V +/-5% in the Aux Power Port **NOTE**: Aux Power Port is recommended when long cables are connected to Communication Port.
Consumption (Typical)	Gun Only: 330 mA @ 3,7V(Operative) Cradle Only: 100mA @5V - 55mA @12V Cradle with Gun in Charge (Scan while Charging): • 475 mA (PC host USB) • 1000 mA (5V on Aux Power Port) • 700 mA (12V on Aux Power Port) Gun Charging via micro USB: • 500 mA (PC host port, no Scan)
Power Pack	Battery Pack: Li 3.6V, 3250 mAh (11.7W/h) Super Cap Pack: 3.4V 1000F
Number of scans from full charge[a] **Autonomy from full charge**[b]	Battery pack +80,000 scans Super Cap pack +7,000 scans Battery pack +80 hours Super Cap pack +6 hours

Recharge Time (Typical)	BATTERY PACK Using USB 5V port: • From empty to full: approx. 11h (no Scan) • From 10% to 80%: approx. 8,0h (no Scan) • From empty to 100 scans: approx. 20-30 minutes (no Scan) Using Aux Power Port 12V: • From empty to full: approx. 3,5h • From 10% to 80%: approx. 2,0h • From empty to 100 scans: approx. 5-10 minutes (no Scan) SUPERCAP PACK Using USB 5V port: • From empty to full: approx. 50minutes (no Scan) • From 10% to 80%: approx. 35 minutes (no Scan) • From empty to 100 scans: approx. 1-2 minutes (no Scan) Using Aux Power Port 12V: • From empty to full: approx. 15minutes (no Scan) • From 10% to 80%: approx. 7 minutes (no Scan) • From empty to 100 scans: approx. 15 seconds (no Scan)
Reading Indicators	Beeper (adjustable tone); Good-read feedback: Datalogic 'Green Spot' on the Code; Good-read LED; Vibration feedback
ENVIRONMENTAL CHARACTERISTICS	
Operating Temperature	0 °C to + 50 °C (+32° F to +122 °F)
Storage Temperature	-40 °C to + 70 °C (-40 ° F to +158 °F)
Humidity	95% non condensing
Drop Resistance	IEC 68-2-32 Tested 1.8 m (6 ft)
Tumble Specification	Designed to withstand 2,000 1.5 ft./0.5 m tumbles
Trigger Resistance	Withstands 10 Mhits
ESD Protection	16 KV
Protection Class	IP52
Cable Length	Refer to www.datalogic.com
OPTICAL CHARACTERISTICS	
Imager Sensors	High Performance models (HP, dual sensor): 1.5 Megapixel (1360 x 1120 pixels) + VGA (640 x 600 pixels)
Illumination System	Illumination: dual color Warm White or Hyper Red LED (user selectable) IEC 62471 Exempt Risk Group
Aiming System	LED Green central cross IEC 62471 Exempt Risk Group
Ambient Light Up to	Up to 100,000 lux
Tilt Tolerance[c]	0° - 360°

Pitch Tolerance[c]	+/- 65°
Skew Tolerance[c]	+/- 65°
Field of View[c]	HP: dual sensor (47° x 40° and 22° x 20°)
PCS (Datalogic Test Chart)	minimum 15%
Motion Tolerance	70 IPS
Max.Scan Rate	60 frames/sec

a. Based on a simulation of 1 scan per second (continuous operation – dedicated settings)
b. Based on a simulation of 10 scans (1 per second), followed by 50 seconds in standby mode (dedicated settings)
c. Based on ISO 15423 specifications

RADIO CHARACTERISTICS			
Wireless Technology	Star™ 910 MHz	Star™ 433 MHz	Bluetooth
Range (in open air)	50 m	50 m	100 m
Max number of devices per base station	16		7

COMMON READING CHARACTERISTICS

Table 24 - Reading Characteristics

DOF - DEPTH OF FIELD (TYPICAL)[A]		
Symbology	**HP models (High Performance)**	**HD models (High Density)**
Code 39	3 mils: 2.5 - 20 cm (1.0” - 7.9”) 5 mils: 0.5 - 35 cm (0.2" - 13.8") 10 mils: 0[b]- 60 cm (0.0" - 23.6") 20 mils: 0[b] - 125 cm (0.0[b]” 49.2")	3 mils: 2.5 - 15 cm (0.9" - 5.9") 5 mils: 0.5 - 22 cm (1.9” - 8.6”) 10 mils: 0[b] - 35 cm (0.0"- 13.7") 20 mils: 0[b] - 52 cm (0.0"- 20.4")
Code 128	3 mils: 3.5 - 14.5 cm (1.3” - 5.7”) 5 mils: 1.5 - 30 cm (0.5” - 11.8”) 7.5 mils: 0[b] - 46 cm (0.0” - 18.1”) 15 mils: 0[b] - 90 cm (0.0” - 35.4”)	3 mils: 3.5 - 11.5 cm (1.3” - 4.5”) 5 mils: 1.5 - 20 cm (0.5” - 7.8”) 7.5 mils: 0[b] - 25 cm (0.0” - 9.8”) 15 mils: 0[b] - 38 cm (0.0”- 14.9”)
EAN 13	13 mils: 0[b] - 100 cm (0.4" - 39.3")	13 mils: 0[b] - 50 cm (0" - 19.6")
PDF 417	5 mils: 2.5 - 17 cm (0.9” - 6.6”) 6.7 mils: 1 - 24.5 cm (0.3" - 9.6”) 10 mils: 0.5[b] - 38.5 cm (0.2"-15.1”)	5 mils: 2.5 - 15 cm (0.9" - 5.9”) 6.7 mils: 1 - 19 cm (0.3"- 7.4”) 10 mils: 0.5 [b]-27 cm (0.2"-15.1”)
Data Matrix	5 mils: 3.5 - 10 cm (1.3” - 3.9”) 7.5 mils: 2 - 20 cm (0.7” - 7.8”) 10 mils: 0.5[b] - 29.5 cm (0.2"-11.6") 15 mils: 0.5[b] - 44 cm (0.2" - 17.3”)	5 mils: 3.5 - 10 cm (2.2" - 3.5") 7.5 mils: 2 - 15 cm (0.7” - 5.9”) 10 mils: 0.5[b]- 20 cm (0.2”- 7.8”) 15 mils:0.5[b]-26 cm (0.2”-10.2”)
QR	10 mils: 0.5[b] - 25 cm (0.2” - 9.8”) 20 mils: 0.5[b] - 51 cm (0.2” - 20”)	10 mils: 0.5[b] - 20 cm (0.2”-7.8”) 20 mils: 0.5[b]-32 cm (0.2”-12.5”)

Resolution (Maximum)	1D Linear: 0.077 mm / 3 mils PDF417: 0.077 mm / 3 mils Data Matrix: 0.102 mm / 4 mils

a. Label size, printing resolution, contrast, and ambient light dependent. All labels grade A. 13 mils DOF based on EAN. Typical environmental light, 20°C.
b. Minimum distance determined by symbol length and scan angle.

DECODING CAPABILITIES

DECODE CAPABILITY
1D Bar Codes UPC/EAN/JAN (A, E, 13, 8); UPC/EAN/JAN (including P2 /P5); UPC/EAN/JAN (including; ISBN / Bookland & ISSN); UPC/EAN Coupons; Code 39 (including full ASCII); Code 39 Trioptic; Code39 CIP HR (French Pharmaceutical); LOGMARS (Code 39 w/ standard check digit enabled); Danish PPT; Code 32 (Italian Pharmacode 39); Code 128; Code 128 ISBT; Interleaved 2 of 5; Standard 2 of 5; Interleaved 2 of 5 CIP (HR); Interleaved 2 of 5 Febraban (for desk models only); Industrial 2 of 5; Discrete 2 of 5; Datalogic 2 of 5 (China Post Code/ Chinese 2 of 5); IATA 2 of 5 Air cargo code; Follet 2 of 5; Codabar; Codabar (NW7); ABC Codabar; Code 11; Code 93; MSI; PZN; Plessey; Anker Plessey; GS1 DataBar Limited; GS1 DataBar Expanded; GS1 DataBar Truncated; DATABAR Expanded Coupon.
2D Stacked Codes The Gryphon I 4600 family is capable of decoding the following symbologies using multiple frames (i.e. Multi-Frame Decoding): Datamatrix; Inverse Datamatrix; Datamatrix is configurable for the following parameters:; Normal or Inverted; Square or Rectangular Style; Data length (1 - 3600 characters); Maxicode; QR Codes (QR, Micro QR and Multiple QR Codes); GS1 Digital Link; Aztec; Postal Codes - (Australian Post; Japanese Post; KIX Post; Planet Code; Postnet; Royal Mail Code (RM45CC); Intelligent Mail Barcode (IMB); Sweden Post; Portugal Post); LaPoste A/R 39; PDF-417; MacroPDF; Micro PDF417; GS1 Composites (1 - 12); French CIP13[a]; GS1 DataBar Stacked; GS1 DataBar Stacked Omnidirectional; GS1 DataBar Expanded Stacked; GS1 Databar Composites; GS1 DotCode; Chinese Sensible Code; Inverted 2D codes[b].

a. It is acceptable to handle this with ULE.
b. The SW can apply the Normal/Reverse Decoding Control to the following symbologies: Datamatrix, QR, Micro QR, Aztec and Chinese Sensible Code.

LED AND BEEPER INDICATIONS

The reader's beeper sounds and its illumination flashes or changes color to indicate various functions or errors on the reader. A "Green Spot" also lights to indicate a good read. The tables below list these indications.

Table 25 - LED and Beeper Indications

INDICATION	LED	BEEPER
Power-up	Upper LED flashes/blinks on power-up, however, this may be too rapid to view. With a USB interface, the LED blinks until enumeration with the host is completed.	Reader beeps four times at highest frequency and volume upon power-up.
Good Read	Upper green LED comes on for programmed time (default). LED behavior for this indication is configurable using Aladdin utility.	One beep at current frequency, volume, mono/bi-tonal setting upon a successful label scan. It is also possible to upload custom jingles with Aladdin.
ROM Failure	200 msec on ↔ 200 msec off	Reader sounds one error beep at highest volume for 200 msec.
Limited Scanning Label Read	N/A	Reader 'chirps' six times at the highest frequency and current volume.
Reader Disabled	The LED blinks continuously 100 msec on ↔ 900 msec off	N/A

USER INDICATIONS FOR GD4600

Table 26 - User Indications for GD4600

STATUS	3GL AND GOOD READ LED	BUZZER
Power-up	OFF	Rising Beeps' Sequence
USB Enumeration Phase	250 msec[a] ON ↔ 250 msec OFF	OFF
USB Suspend	Depends on Power Cable and specific configurations	OFF
Idle	OFF	OFF
While Reading	OFF	OFF
Decode Done	Solid ON Programmable Duration (1 s default)	Single Beep
Reader Disabled (POS) Communication with host not established	100 msec ON ↔ 900 msec OFF	OFF
Firmware Upgrade	250 msec ON ↔ 250 msec OFF	OFF
Host Download	250 msec ON ↔ 250 msec OFF	OFF
Enter Service Mode	No Effect	Beeps' Sequence
Label Programming	No Effect	Beep

a. "msec" stands for milliseconds, equivalent to 1/1000th of a second

USER INDICATIONS FOR GBT/GM4600 (GUN ONLY)

Table 27 - User Indications for GBT/GM4600 Gun

STATUS	3GL AND GOOD READ LED	BATTERY LED	BUZZER
Power-up	OFF	OFF	Rising Beeps' Sequence
USB Enumeration Phase	250 msec[a] ON ↔ 250 msec OFF	OFF	OFF
USB Suspend	Depends on Power Cable and specific configurations	OFF	OFF
Idle	OFF	OFF	OFF
While Reading	OFF	OFF	OFF
Decode Done	Solid ON Programmable Duration (1 s default)	OFF	Single Beep
Reader Disabled (POS) Communication with host not established	100 msec ON ↔ 900 msec OFF	OFF	OFF
Firmware Upgrade	250 msec ON ↔ 250 msec OFF	OFF	OFF
Host Download	250 msec ON ↔ 250 msec OFF	OFF	OFF
Paging Answer	5 cycles: 100 msec ON ↔ 900 msec OFF	OFF	5 Beeps (when LED ON)
Enter Service Mode	No Effect	OFF	Beeps' Sequence
Label Programming	No Effect	OFF	Beep
ACK Received on Transmission	OFF	OFF	Single Programmable Beep (OFF by default)
ACK NOT Received on Transmission	OFF	OFF	Wrong Beep
Base Station in USB Suspend	Depends on Power Cable and specific configurations	OFF	OFF
Configuration Alignment	250 msec ON ↔ 250 msec OFF	OFF	OFF
Charge in Progress through microUSB[b]	OFF	Blinking: 1 s ON . 1 s OFF Green (charge = 50% - 99%) Amber (charge = 1% - 49%) Red (charge less than 1%) Reader is unusable until 1% is reached	OFF
Charge Complete through microUSB	OFF	Solid Green It goes OFF when unplugged	OFF
Charge Fault	OFF	OFF	OFF
Charge in Progress through base station	OFF	OFF	OFF

STATUS	3GL AND GOOD READ LED	BATTERY LED	BUZZER
Charge Complete through base station	OFF	OFF	OFF
Battery Status indications when not charging, using double tap	OFF	Solid with programmable duration (3 s default) and then OFF Green (charge = 50% - 100%) Amber (charge = 2% - 50%) Red forced loop (charge less than 2%)	OFF

a. "msec" stands for milliseconds, equivalent to 1/1000th of a second
b. In case of heavily depleted battery (e.g. if the reader has not been used for a long time), the reader being charged will not be operational for a certain amount of time, which can vary from just a few minutes to 30-40 minutes depending on battery discharge level and power supplied to the base station (i.e. longer time if the base station is connected to USB only without external power supply).

USER INDICATIONS FOR WLC4690 BASE STATIONS

Table 28 - User Indications for WLC4690 Base Stations

STATUS	TRANSMISSION LEDS	CHARGING LEDS
Power-up	Solid ON	OFF
USB Enumeration	250 msec[a] ON ↔ 250 msec OFF	OFF
USB Suspend	Depends on Power Cable and specific configurations	OFF
Idle	Solid ON	OFF
While Reading	Solid ON	OFF
Label Transmitted to Host	OFF for 100 msec andd then Solid ON	OFF
Reader Disabled (POS) Communication with host not established	100 msec ON ↔ 900 msec OFF	OFF
Firmware Upgrade	250 msec ON ↔ 250 msec OFF	OFF
Host Download	250 msec ON ↔ 250 msec OFF	OFF
Configuration Alignment	250 msec ON ↔ 250 msec OFF	OFF
Enter Service Mode	No Effect (remains Solid ON)	OFF
Short button press (1-5 s) Paging request	Blink Green 500 msec ON ↔ 500 msec OFF (for 5 s while pressing button)	OFF
Charge in Progress	No Effect	Fading: 1 s ON ↔ 1 s OFF Green (charge = 50% - 99%) Amber (charge = 0% - 49%)
Charge Complete	No Effect	Solid Green It goes OFF when unplugged
Charge Fault	No Effect	OFF
Electrical Fault	OFF	OFF

a. “msec” stands for milliseconds, equivalent to 1/1000th of a second

PROGRAMMING MODE

The following indications ONLY occur when the reader is in Programming Mode.

INDICATION	DESCRIPTION	LED	BEEPER
Enter Programming Mode	A valid programming label has been scanned.	LED blinks continuously	Reader sounds four low frequency beeps.
Rejection of Label	Label has been rejected.	N/A	Reader sounds three times at lowest frequency & current volume.
Acceptance of Partial Label	In cases where multiple labels must be scanned to program one feature, this indication acknowledges each portion as it is successfully scanned.	N/A	Reader sounds one short beep at highest frequency & current volume.
Acceptance of Programming	Configuration option(s) have been successfully programmed via labels and the reader has exited Programming Mode.	N/A	Reader sounds one high frequency beep and four low frequency beeps followed by reset beeps.
Cancel Item Entry	Cancel label has been scanned.	N/A	Reader sounds twice at low frequency & current volume.

TROUBLESHOOTING

PROBLEM	POSSIBLE CAUSE	POSSIBLE SOLUTION
Nothing happens when the scan button is pulled.	No power to the reader	Check system power. Ensure power supply is connected.
	Interface or power cables are loose.	Ensure all cable connections are secure.
LED comes on but bar code does not decode.	Reader not programmed for correct bar code type.	Ensure reader is programmed to read the type of bar code scanned.
	Bar code label is unreadable.	Check the label to ensure it is not defaced. Try scanning another bar code type.
	Distance between reader and bar code is incorrect.	Move reader closer to or further from the bar code.
Bar code is decoded but not transmitted to the host.	Reader not programmed for the correct host type.	Scan the appropriate host type bar code.

Figure 22 and Table 29 provide standard pinout information for the reader's cable.

Figure 22 Standard Cable Pinouts

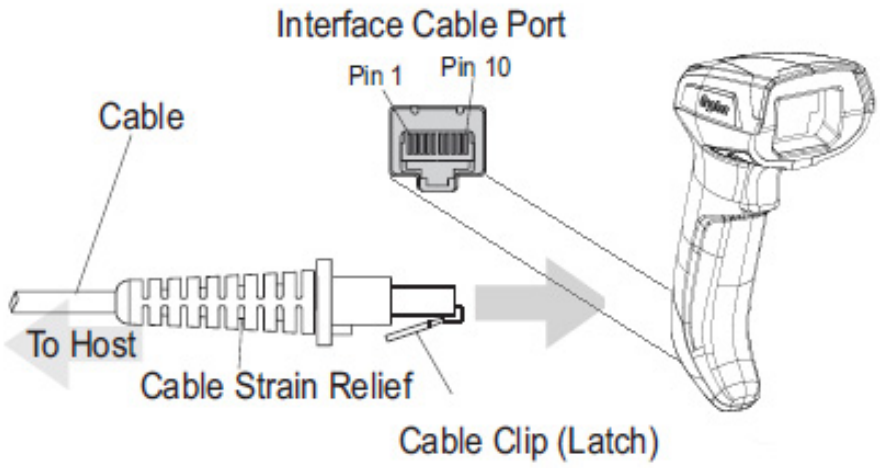

The signal descriptions in Table 29 apply to the connector on the reader and are for reference only.

Table 29 - Standard Cable Pinouts — Reader Side

PIN	RS232	USB
1	RTS (out)	
2		D+
3		D-
4	GND	GND
5	RX	
6	TX	
7	VCC	VCC
8		
9		
10	CTS (in)	

OVERALL DIMENSIONS

Gun Mechanical Dimensions

The following drawing shows the space required by the Gryphon GD/GBT/GM4600.

Figure 23 - Gryphon GD4600

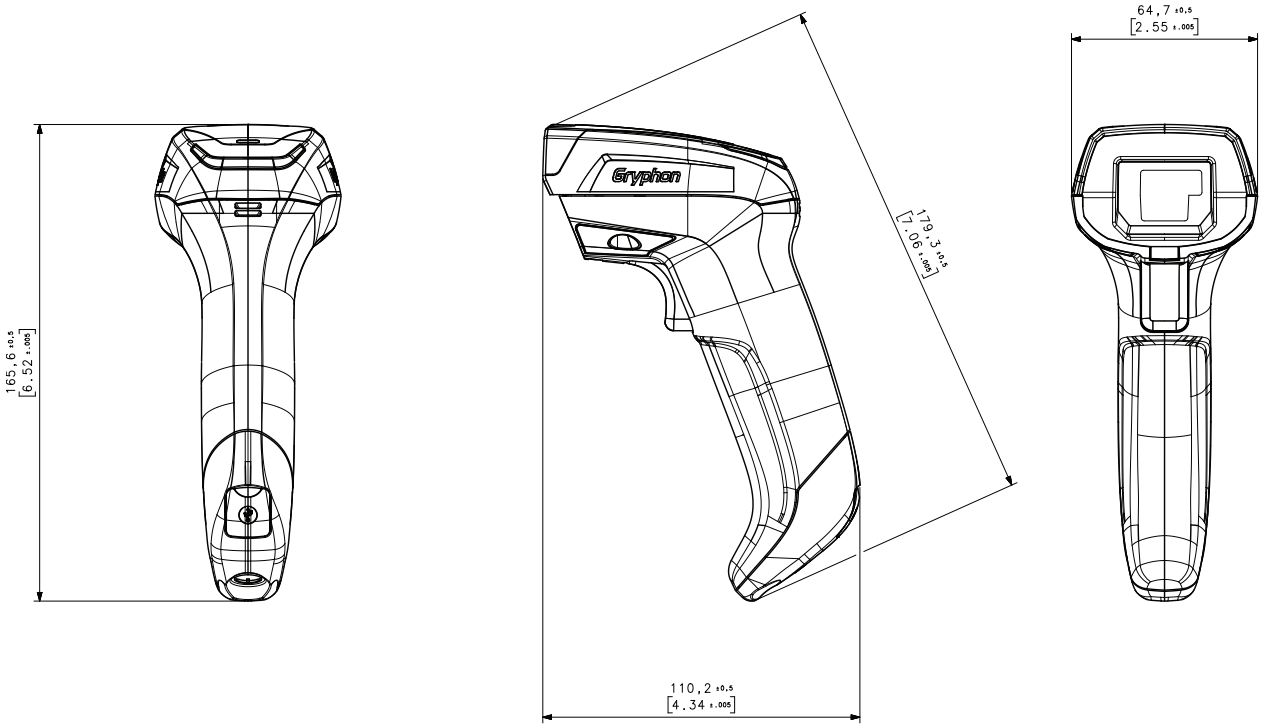

Figure 24 - Gryphon GBT/GM4600

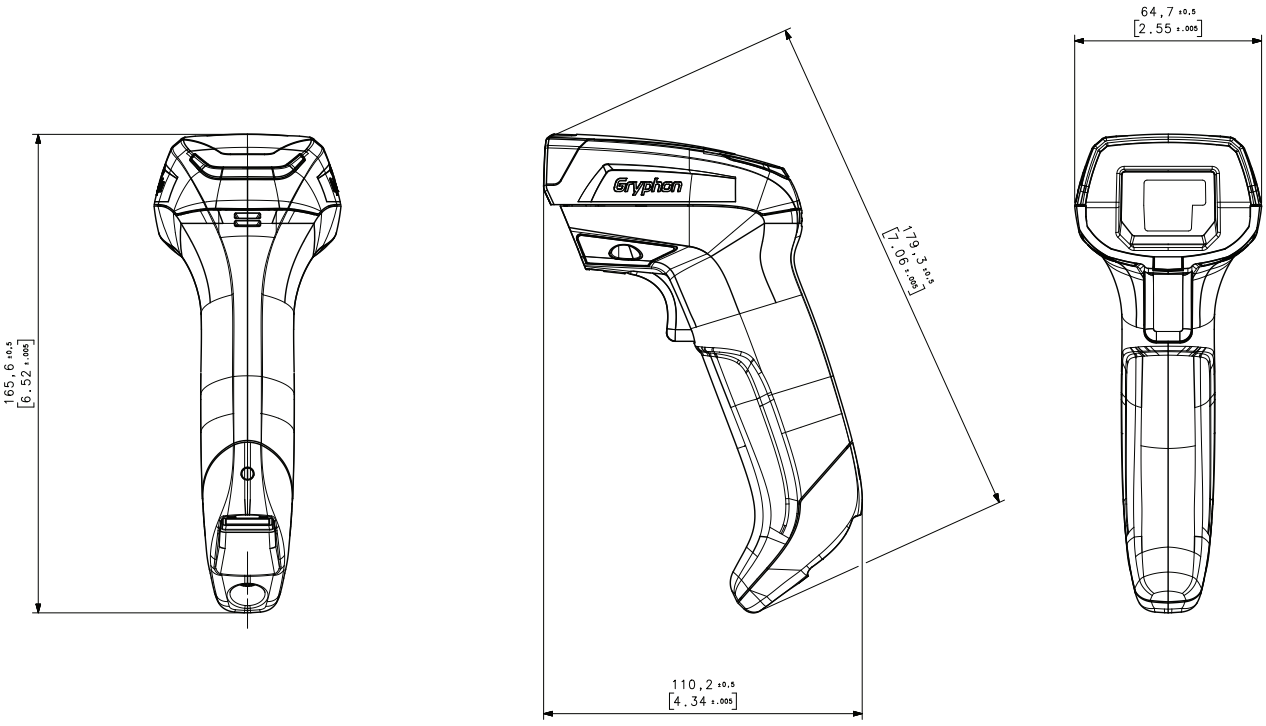

Presentation Mode Base Mechanical Dimensions

The following drawing shows the Gryphon GD4600 assembled with the foot support PM-BASE-GD46-BK.

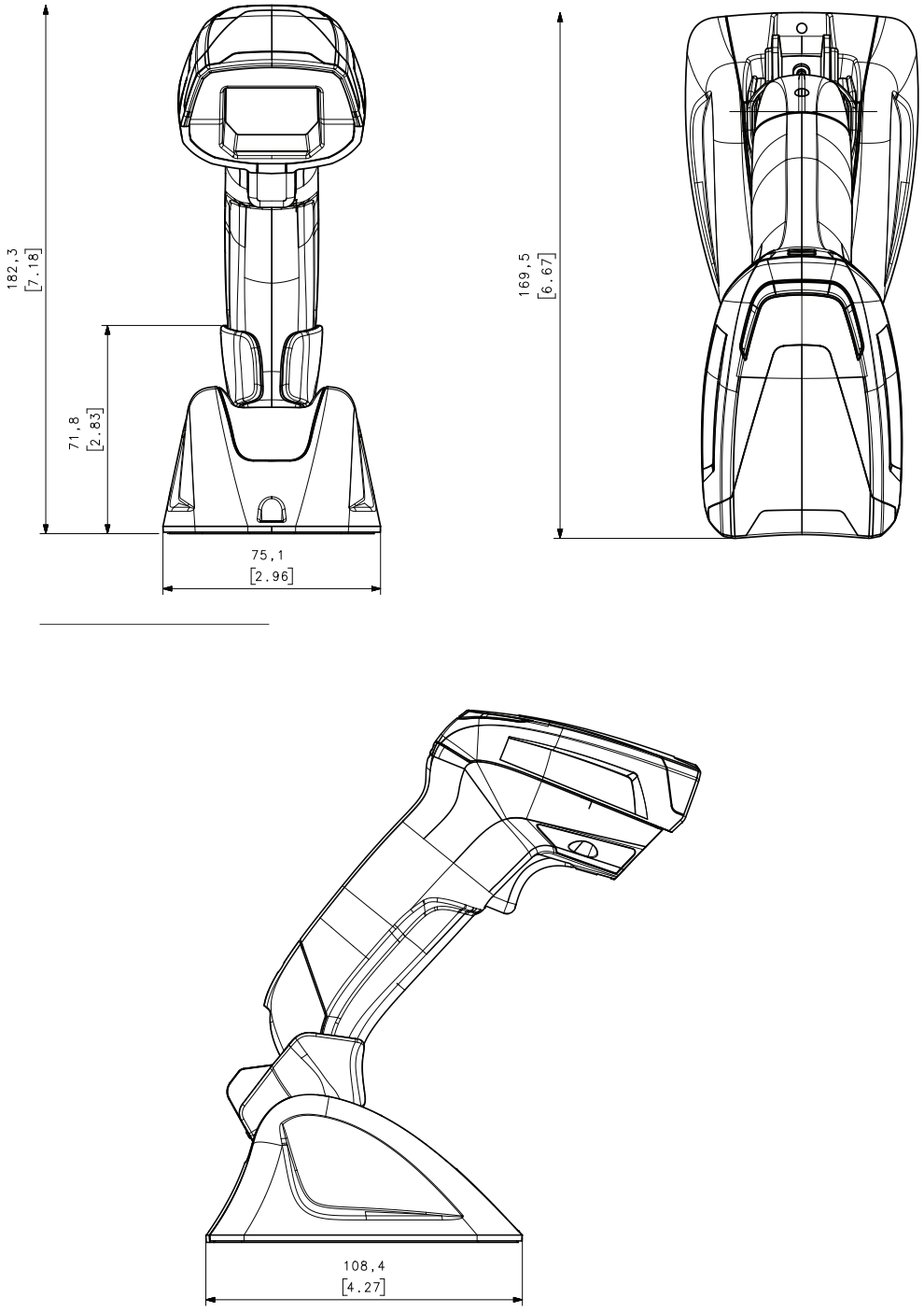

Cradle Mechanical DImensions

The following drawing shows the space required by the WLC4690 Gryphon GBT/ GM4600.

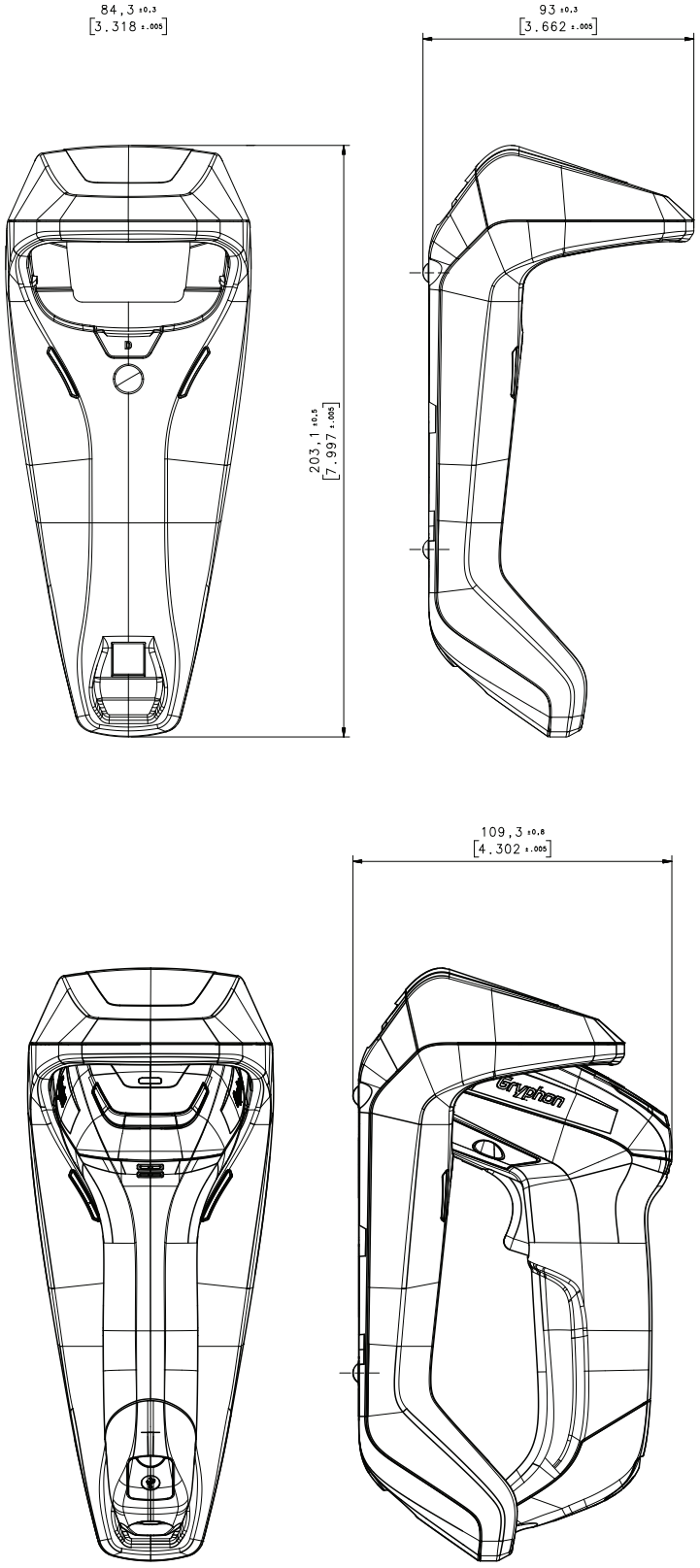

APPENDIX B
STANDARD DEFAULTS

The most common configuration settings are listed in the “Default” column of the table below. Page references are also provided for feature descriptions and programming bar codes for each parameter. A column has also been provided for recording of your preferred default settings for these same configurable features.

Table 30 Standard Defaults

PARAMETERS	DEFAULT	YOUR SETTING	PAGE NUMBER
GLOBAL INTERFACE FEATURES			
Host Commands — Obey/Ignore	Obey		39
USB Suspend Mode	Enable		39
RS-232 ONLY			
Baud Rate	9600		41
Data Bits	8 Data Bits		42
Stop Bits	1 Stop Bit		42
Parity	None		43
Handshaking Control	RTS		44
RS-232/USB-COM			
Intercharacter Delay	No Delay		46
Beep On ASCII BEL	Disable		47
Beep On Not on File	Enable		47
ACK NAK Options	Disable		48
ACK Character	‘ACK’		49
NAK Character	‘NAK’		49
ACK NAK Timeout Value	200 msec		50
ACK NAK Retry Count	3 Retries		49
ACK NAK Error Handling	Ignore Errors Detected		51

PARAMETERS	DEFAULT	YOUR SETTING	PAGE NUMBER
Indicate Transmission Failure	Enable		51
Disable Character	'D'		52
Enable Character	'E'		52
USB Keyboard Speed	1ms		79
USB OEM			
USB-OEM Device Usage	Handheld		82
DATA FORMAT			
Global Prefix/Suffix	No Global Prefix Global Suffix = 0x0D (CR)		84
Case Conversion	Disable (no case conversion)		85
Character Conversion	0xFFFFFFFFFFFFFFFF (no character conversion)		85
Global AIM ID	Disable		86
GS1-128 AIM ID	Disable		86
Label ID: Pre-loaded Sets	USA Set		87
Label ID Control	Disable		88
Label ID Symbology Selection			89
READING PARAMETERS			
Scan Mode	Trigger Simple		95
Scanning Active Time	5 seconds		96
Flash On Time	10 = Flash is ON for 1 second		96
Flash Off Time	06 = Flash is OFF for 600ms		97
Double Read Timeout	0.6 second		97
Stand /Base Detection Behavior	Switch to Stand Mode/Object Detection		99
Stand Mode/Object Detection Indication (Stand Mode Flash)	Disable		100
Stand Mode/Object Detection Sensitivity	Medium		100
Stand Mode/Object Detection Illumination Off Time	1 second		101
Illumination Intensity	Full Intensity		101
Corded Stand Mode	Disable		102
Dock Detection Beep	Disable		103

PARAMETERS	DEFAULT	YOUR SETTING	PAGE NUMBER
Corded Stand Beep	Disable		103
Power On Alert	Power-up Beep		104
Good Read Beep Type	Mono		104
Good Read Beep Frequency	High		105
Good Read Beep Length	80 msec		106
Good Read Beeper Volume / Vibration	High		107
Vibration Feedback for Good Read	Enable		107
Silent Mode	Disable		108
RGB Good Read Enable	Enable		108
RGB Good Read Color	GREEN		109
Good Read LED Duration	300 msec		110
Good Read: When to Indicate	After Decode		111
Green Spot Duration	Short (300 msec)		112
Aiming Pointer	Enable		113
Pick Mode	Disable		114
Mobile Phone Mode	Enable		114
Mobile Phone Saturation Rate	00		115
Decode Negative Image	Disable		116
Multiple Labels per Frame	Disable		117
Multiple Labels Ordering by Code Symbology	Random Order		118
Multiple Labels Ordering by Code Length	Disable		118
CODE SELECTION - 1D SYMBOLOGIE			
Code EAN/UPC			
Coupon Control	Enable only UPC/EAN		122
UPC-A			
UPC-A Enable/Disable	Enable		123
UPC-A Check Character Transmission	Send		123
Expand UPC-A to EAN-13	Don't expand		124

PARAMETERS	DEFAULT	YOUR SETTING	PAGE NUMBER
UPC-A Number System Character Transmission	Transmit		124
UPC-E			
UPC-E Enable/Disable	Enable		125
UPC-E Check Character Transmission	Send		125
Expand UPC-E to EAN-13	Don't expand		126
Expand UPC-E to UPC-A	Don't expand		126
UPC-E Number System Character Transmission	Transmit		126
GTIN			
GTIN Formatting	Disable		127
EAN 13 (Jan 13)			
EAN-13 Enable/Disable	Enable		128
EAN-13 Check Character Transmission	Send		128
EAN-13 Flag 1 Character	Transmit		129
EAN-13 to ISBN Conversion	Disable		129
ISSN			
EAN-13 to ISSN Conversion	Disable		130
EAN 8			
EAN-8 Enable/Disable	Enable		131
EAN-8 Check Character Transmission	Send		131
Expand EAN-8 to EAN-13	Don't Expand		132
UPC/EAN Global Settings			
UPC/EAN Price Weight Check	Disable		133
UPC/EAN Quiet Zones	Two Modules		134
ADD-ONS			
Optional Add-ons	Disable P2 and P5		135
Optional Add-On Timer	70 msec		136
GS1 DATABAR™ OMNIDIRECTIONAL			
GS1 DataBar Omnidirectional Enable/Disable	Disable		137

PARAMETERS	DEFAULT	YOUR SETTING	PAGE NUMBER
GS1 DataBar Omnidirectional to GS1-128 Emulation	Enable		137
GS1 DataBar Expanded Enable/Disable	Disable		138
GS1 DataBar Expanded to GS1-128 Emulation	Disable		138
GS1 DataBar Expanded Length Control	Variable		139
GS1 DataBar Expanded Set Length 1	1		139
GS1 DataBar Expanded Set Length 2	74		140
GS1 DATABAR™ LIMITED			
GS1 DataBar Limited Enable/Disable	Enable		141
GS1 DataBar Limited to GS1-128 Emulation	Disable		141
CODE 39			
Code 39 Enable/Disable	Enable		142
Code 39 Check Character Calculation	Don't calculate		142
Code 39 Check Character Transmission	Send		143
Code 39 Start/Stop Character Transmission	Don't transmit		143
Code 39 Full ASCII	Disable		144
Code 39 Quiet Zones	No Quiet Zones		144
Code 39 Length Control	Variable		145
Code 39 Set Length 1	2		145
Code 39 Set Length 2	50		146
TRIOPTIC CODE			
Trioptic Code Enable/Disable	Disable		147
CODE 39 DANISH PPT			
Code 39 Danish PPT Enable/Disable	Disable		147
CODE 39 PZN			
Code 39 PZN Enable/Disable	Disable		148
CODE 39 LA POSTE			
Code 39 La Poste Enable/Disable	Disable		148

PARAMETERS	DEFAULT	YOUR SETTING	PAGE NUMBER
CODE 32 (Italian Pharmaceutical Code)			
Code 32 Enable/Disable	Disable		149
Code 32 Check Character Transmission	Don't Send		149
Code 32 Start/Stop Character Transmission	Don't Transmit		150
Code 39 CIP HR (French Pharmaceutical Code)			
Code 39 CIP HR Enable/Disable	Disable		151
SPECIAL CODES			
Code 128			
Code 128 Enable/Disable	Enable		152
Expand Code 128 to Code 39	Don't Expand		152
Code 128 Check Character Transmission	Don't Send		153
Code 128 Function Character Transmission	Don't Send		153
Code 128 Quiet Zones	Auto		154
Code 128 Length Control	Variable		154
Code 128 Set Length 1	1		155
Code 128 Set Length 2	80		155
GS1-128			
GS1-128 Enable	Transmit in GS1-128 data format		156
INTERLEAVED 2 of 5			
I 2 of 5 Enable/Disable	Enable		157
I 2 of 5 Check Character Calculation	Disable		158
I 2 of 5 Check Character Transmission	Send		159
I 2 of 5 Length Control	Variable		160
I 2 of 5 Set Length 1	6		160
I 2 of 5 Set Length 2	50		161
INTERLEAVED 2 of 5, FEBRABAN FORMAT (Desk Models Only)			
Interleaved 2 of 5, Febraban format Enable / Disable	Disable		162
INTERLEAVED 2 of 5 CIP HR			

PARAMETERS	DEFAULT	YOUR SETTING	PAGE NUMBER
Interleaved 2 of 5 CIP HR Enable/Disable	Disable		163
MATRIX 2 of 5			
Matrix 2 of 5 Enable/Disable	Disable		164
Matrix 2 of 5 Check Character Calculation	Disable		164
Matrix 2 of 5 Check Character Transmission	Send		165
Matrix 2 of 5 Length Control	Variable Length		165
Matrix 2 of 5 Set Length 1	8 characters		166
Matrix 2 of 5 Set Length 2	50 characters		166
STANDARD 2 of 5			
Standard 2 of 5 Enable/Disable	Disable		167
Standard 2 of 5 Check Character Calculation	Disable		167
Standard 2 of 5 Check Character Transmission	Send		168
Standard 2 of 5 Length Control	Variable Length		168
Standard 2 of 5 Set Length 1	08 (8 characters)		169
Standard 2 of 5 Set Length 2	50 (50 characters)		169
COMPRESSED 2 of 5			
Compressed 2 of 5 Enable/Disable	Disable		170
Compressed 2 of 5 Check Character Calculation	Disable		170
Compressed 2 of 5 Check Character Transmission	Send		171
Compressed 2 of 5 Length Control	Variable Length		171
Compressed 2 of 5 Set Length 1	1 character		172
Compressed 2 of 5 Set Length 2	50 characters		172
DATALOGIC 2 OF 5			
Datalogic 2 of 5 Enable/Disable	Disable		173
Datalogic 2 of 5 Check Character Calculation	Disable		173
Datalogic 2 of 5 Check Character Transmission	Send		174

PARAMETERS	DEFAULT	YOUR SETTING	PAGE NUMBER
Datalogic 2 of 5 Length Control	Variable Length		174
Datalogic 2 of 5 Set Length 1	6 characters		175
Datalogic 2 of 5 Set Length 2	50 characters		175
INDUSTRIAL 2 of 5			
Industrial 2 of 5 Enable/Disable	Disable		176
Industrial 2 of 5 Check Character Calculation	Disable		176
Industrial 2 of 5 Check Character Transmission	Send		177
Industrial 2 of 5 Length Control	Variable		177
Industrial 2 of 5 Set Length 1	6 characters		178
Industrial 2 of 5 Set Length 2	50 characters		178
CODE IATA			
IATA Enable/Disable	Disable		179
IATA Check Character Transmission	Send		179
FOLLET 2 OF 5			
Follett 2 of 5 Enable/Disable	Disable		180
CODABAR			
Codabar Enable/Disable	Enable		181
Codabar Check Character Calculation	Disable		181
Codabar Check Character Transmission	Send		182
Codabar Start/Stop Character Transmission	Transmit		182
Codabar Start/Stop Character Set	abcd/abcd		183
Codabar Start/Stop Character Match	Don't Require Match		183
Codabar Quiet Zones	Disable		184
Codabar Length Control	Variable		185
Codabar Set Length 1	3 characters		185
Codabar Set Length 2	50 characters		186
ABC CODABAR			
ABC Codabar Enable/Disable	Disable		187

PARAMETERS	DEFAULT	YOUR SETTING	PAGE NUMBER
ABC Codabar Concatenation Mode	Static		187
ABC Codabar Dynamic Concatenation Timeout	200 msec		188
ABC Codabar Force Concatenation	Disable		188
ISBT-128			
ISBT 128 Concatenation	Disable		189
ISBT 128 Concatenation Mode	Static		189
ISBT 128 Dynamic Concatenation Timeout	200 msec		190
ISBT 128 Force Concatenation	Disable		191
ISBT 128 Advanced Concatenation Options	Disable		191
CODE 11			
Code 11 Enable/Disable	Disable		192
Code 11 Check Character Calculation	Check C and K		192
Code 11 Check Character Transmission	Send		193
Code 11 Length Control	Variable		193
Code 11 Set Length 1	4 characters		194
Code 11 Set Length 2	50 characters		194
CODE 93			
Code 93 Enable/Disable	Disable		195
Code 93 Check Character Calculation	Enable Check C and K		195
Code 93 Check Character Transmission	Disable		196
Code 93 Length Control	Variable		196
Code 93 Set Length 1	1 character		197
Code 93 Set Length 2	50 characters		197
Code 93 Quiet Zones	Enable		198
MSI			
MSI Enable/Disable	Disable		199
MSI Check Character Calculation	Calculate Mod 10		199
MSI Check Character Transmission	Send		200

PARAMETERS	DEFAULT	YOUR SETTING	PAGE NUMBER
MSI Length Control	Variable		200
MSI Set Length 1	1 character		201
MSI Set Length 2	50 characters		201
PHARMACODE			
Pharmacode Enable/Disable	Disable		202
Pharmacode Label Direction	Horizontal left to right		202
Pharmacode Length Control	Variable		203
Pharmacode Set Length 1	02 characters		203
Pharmacode Set Length 2	6 characters		204
PLESSEY			
Plessey Enable/Disable	Disable		205
Plessey Check Character Calculation	Plessey std check char. verification		205
Plessey Check Character Transmission	Send		206
Plessey Length Control	Variable		206
Plessey Set Length 1	1 character		207
Plessey Set Length 2	50 characters		207
BC412			
BC412 Enable/Disable	Disable		208
BC412 Check Character Calculation	Calculate		208
BC412 Length Control	Variable		209
BC412 Set Length 1	1 character		209
BC412 Set Length 2	50 characters		210
CODE SELECTION - 2D SYMBOLOGIES			
2D Structured Append	350 msec		213
2D Structured Append	Disable		213
2D Normal/Inverse Symbol Control	Both Normal and Inverse		213
AZTEC CODE			
Aztec Code Enable / Disable	Enable		214
Aztec Code Length Control	Variable		214
Aztec Code Set Length 1	1 character		213

PARAMETERS	DEFAULT	YOUR SETTING	PAGE NUMBER
Aztec Code Set Length 2	3,832 characters		215
CHINA SENSIBLE CODE			
China Sensible Code Enable / Disable	Disable		216
China Sensible Code Length Control	Variable		216
China Sensible Code Set Length 1	1 character		217
China Sensible Code Set Length 2	7,827 characters		217
DATA MATRIX			
Data Matrix Enable / Disable	Enable		218
Data Matrix Square/Rectangular Style	Both Square and Rectangular Style		218
Data Matrix Length Control	Variable		219
	1 character		219
Data Matrix Set Length 2	3,116 characters		220
GS1 DOTCODE			
DotCode Enable	Disable		221
DotCode High Resolution Enable	Enable		221
DotCode Position-based Decoding	Disable		222
MAXICODE			
Maxicode Enable / Disable	Disable		223
Maxicode Length Control	Disable		223
Maxicode Length Control	Variable		223
Maxicode Set Length 1	1 character		224
Maxicode Set Length 2	0145 characters		225
PDF417			
PDF417 Enable / Disable	Enable		226
PDF417 Length Control	Variable		226
PDF417 Set Length 1	1 character		227
PDF417 Set Length 2	2,710 characters		228
MICRO PDF417			
Micro PDF417 Enable / Disable	Disable		229

PARAMETERS	DEFAULT	YOUR SETTING	PAGE NUMBER
Micro PDF417 Code 128 GS1-128 Emulation	Micro PDF AIM ID and label type		229
Micro PDF417 Length Control	Variable		230
Micro PDF417 Set Length 1	1 character		230
Micro PDF417 Set Length 2	0366 characters		231
QR CODE			
QR Code Enable / Disable	Enable		232
QR Code Length Control	Variable		232
QR Code Set Length 1	1 character		233
QR Code Set Length 2	7,089 characters		233
GS1 Digital Link - Allow QR Code with URL Link	Enable		234
MICRO QR CODE			
Micro QR Code Enable / Disable	Enable		235
Micro QR Code Length Control	Variable		235
Micro QR Code Set Length 1	1 character		236
Micro QR Code Set Length 2	0035 characters		236
GS1 DIGITAL LINK			
GS1 Digital Link Transmit Mode	Disable		237
GS1 Digital Link Set Labels Read Timeout	300 ms		238
GS1 Digital Link Set Double Read Timeout	700 ms		238
GS1 Digital Link Transmit Format	original label + web address		239
GS1 Digital Link Label Set ID Character for Mode 3	$n		240
UCC COMPOSITE			
UCC Optional Composite Timer	Timer Disabled		241
	Disable All Postal Codes		241
Postnet BB Control	Disable		243
OCR DECODING			
OCR Decoding Predefined Templates	Disable		245
MOTION FEATURES			

PARAMETERS	DEFAULT	YOUR SETTING	PAGE NUMBER
Motionless Timeout	2 seconds		247
Motion Sensitivity	Medium		247
High Motion Immunity	Disable		248
Motion Aiming Control	Enable		248
POWER MANAGEMENT			
Powerdown Timeout	30 minutes		250
Battery Profiles	Maximum Performance		251
WIRELESS FEATURES			
Good Transmission Beep	Enable		254
Beeper Frequency	Low		254
Beep Duration	80 msec		255
Beep Volume	High		256
Disconnect Beep	Enable		256
Docking (Connecting) Beep	Enable		257
Leash Alarm	Disable		257
Automatic Configuration Update	Enable		260
Batch Mode	Disable		261
RF Batch Mode Transmit Delay	No Delay		263
Direct Radio Autolink	Unlink Label Required		264
Source Radio Address Transmission	Do Not Include		265
Source Radio Address Delimiter Character	00 (no delimiter character)		265
Bluetooth Security Level	Level 1 - Lowest		266
Bluetooth Radio Output Power	Class 1 - Highest		267
Wi-Fi Channels Exclusion	Automatic		268
Bluetooth HID Alt Mode	OFF		273
STAR Radio Protocol Timeout	02 (2 seconds)		274
STAR Radio Transmit Mode	ACK from Base Station		275
STAR Frequency Agility	Disable		276

DEFAULT EXCEPTIONS

Table 31 - Default Exceptions by Interface Type

PARAMETER	DEFAULT EXCEPTION
Interfaces: USB-OEM	
Global Suffix	No Global Suffix
Double Read Timeout	600 msec
Interfaces: USB Keyboard	
No unique settings	
Interface: RS232-WN	
Expand UPC-A to EAN-13	Enable
UPC-E Check Character Transmission	Disable
Parity	Odd Parity
Handshaking Control	RTS/CTS
Transmission Label ID Code	Prefix
GS1-128 AIM ID	Disable
UPCE Label ID Character(s)	C
EAN 8 Label ID Character(s)	B
EAN 13 Label ID Character(s)	A
Code ISBN Label ID Character(s)	A
Code 39 Label ID Character(s)	M
MInterleaved 2of5 Label ID Character(s)	I
Code Standard 2/5 Label ID Character(s)	H
Codabar Label ID Character(s)	N
Code 128 Label ID Character(s)	K
GS1-128 Label ID Character(s)	P
Datalogic 2 of 5 Label ID Character(s)	H
ISBT 128 Label ID Character(s)	K
UPCE P2 Label ID Character(s)	C
UPCE/P5 Label ID Character(s)	C
UPCE/GS1-128 Label ID Character(s)	C
EAN8/P2 Label ID Character(s)	B
EAN8/P5 Label ID Character(s)	B
EAN8/GS1-128 Label ID Character(s)	B
EAN13/P2 Label ID Character(s)	A
EAN13/P5 Label ID Character(s)	A
EAN13/GS1-128 Label ID Character(s)	A

PARAMETER	DEFAULT EXCEPTION
GS1 DataBar 14 (Omnidirectional) Label ID Character(s)	E
GS1 DataBar Expanded Label ID Character(s)	E
GS1 DataBar Limited Label ID Character(s)	E
Character Conversion	CR to `
Interface: RS232-OPOS	
Baud Rate	115200 Baud
Transmission Label ID Code	Prefix
GS1-128 AIM ID	Disable
UPCA Label ID Character(s)	C
UPCE Label ID Character(s)	D
EAN 8 Label ID Character(s)	A
EAN 13 Label ID Character(s)	B
Code ISBN Label ID Character(s)	@
Code 39 Label ID Character(s)	V
Code 32 Label ID Character(s)	X
Interleaved 2of5 Label ID Character(s)	N
Code Standard 2/5 Label ID Character(s)	P
Codabar Label ID Character(s)	R
Code 11 Label ID Character(s)	b
Code 128 Label ID Character(s)	T
GS1-128 Label ID Character(s)	k
UPCA/P2 Label ID Character(s)	F
UPCA/P5 Label ID Character(s)	G
UPCA/GS1-128 Label ID Character(s)	Q
UPCE P2 Label ID Character(s)	H
UPCE/P5 Label ID Character(s)	I
EAN8/P2 Label ID Character(s)	J
EAN8/P5 Label ID Character(s)	K
EAN8/GS1-128 Label ID Character(s)	*
EAN13/P2 Label ID Character(s)	L
EAN13/P5 Label ID Character(s)	M
EAN13/GS1-128 Label ID Character(s)	#
GS1 DataBar 14 (Omnidirectional) Label ID Character(s)	u
GS1 DataBar Expanded Label ID Character(s)	t
GS1 DataBar Limited Label ID Character(s)	v

APPENDIX C
SAMPLE BARCODES

The sample bar codes in this appendix are typical representations for their symbology types.

SAMPLE BARCODES

1D Barcodes

UPC-A



EAN-13



Code 39



Code 128



Interleaved 2 of 5

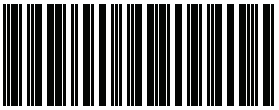

Code 32



Codabar



Code 93



Code 11



GS1 Databar™ (RSS)

GS1 DataBar™ variants must be enabled to read the barcodes below (see "GS1 DataBar™ Omnidirectional" on page 137).

GS1 DataBar™ Expanded Stacked



10293847560192837465019283746029478450366523

GS1 DataBar™ Expanded



1234890hjio9900mnb

GS1 DataBar™ Limited



08672345650916

GS1 Databar™ (-14)

GS1 DataBar™ Omnidirectional Truncated



55432198673467

GS1 DataBar™ Omnidirectional Stacked



90876523412674

GS1 DataBar™ Omnidirectional Stacked



78123465709811

2D Barcodes

Aztec



Data Matrix



China Sensible



MaxiCode

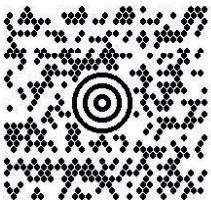

Test Message

PDF417



ABCabc

Micro PDF 417



BV17453

QR Code



35900G9

Micro QR Code



123456

UCC Composite



GS1 Digital Link





APPENDIX D
KEYPAD

Use the bar codes in this appendix to enter numbers as you would select digits/characters from a keypad.



0



1



2



3



4



5



6



7



8



9



A



B



C



D



E



F

APPENDIX E
SCANCODE TABLES

CONTROL CHARACTER EMULATION

Control character emulation selects from different scancode tables as listed in this appendix. Each of the control character sets below are detailed by interface type in the tables. These apply to USB Keyboard platforms.

Control Character 00 : Characters from 00 to 0x1F are sent as control character Ctrl+Keys, special keys are located from 0x80 to 0xA1.

Control Character 01 : Characters from 00 to 0x1F are sent as control character Ctrl+Capital Key, special keys are located from 0x80 to 0xA1.

Control Character 02 : Special keys are located from 00 to 0x1F and characters from 0x80 to 0xFE are intended as an extended ASCII table (Microsoft Windows Codepage 1252 — see page 353).

Single Press and Release Keys

In the following tables, Ar↓ means Alt right pressed and Ar↑ means Alt right released and so on. Definitions for other keys are Al (Alt left), Cr (Control Right) Cl (Control Left) Sh (shift). This method can be used for combining Alt, Control or Shift with other keys.

Example: Consider a Control character set to 00. If AltRight+A is required before sending a label to the host, it could be done by setting three Prefix keys in this way: 0x99 0x41 0x9A.

INTERFACE TYPE PC AT PS/2, USB-KEYBOARD OR USB-KEYBOARD FOR APPLE

Table 32. Scancode Set When Control Character is 00 or 01

	x0	x1	x2	x3	x4	x5	X6	x7	x8	x9	xA	xB	xC	xD	xE	xF
0x	NULL C+@	SOH C(S)+A	STX C(S)+B	ETX C(S)+C	EOT C(S)+D	ENQ C(S)+E	ACK C(S)+F	BEL C(S)+G	BS	HT TAB	LF C(S)+J	VT C(S)+K	FF C(S)+L	CR Enter	SO C(S)+N	SI C(S)+O
1x	DLE C(S)+P	DC1 C(S)+Q	DC2 C(S)+R	DC3 C(S)+S	DC4 C(S)+T	NAK C(S)+U	SYN C(S)+V	ETB C(S)+W	CAN C(S)+X	EM C(S)+Y	SUB C(S)+Z	ESC Esc	FS C+\	GS C+]	RS C+^	US C(S)+_
2x	SP	!	"	#	$	%	&	'	(	)	*	+	,	-	.	/
3x	0	1	2	3	4	5	6	7	8	9	:	;	<	=	>	?
4x	@	A	B	C	D	E	F	G	H	I	J	K	L	M	N	O
5x	P	Q	R	S	T	U	V	W	X	Y	Z	[	\	]	^	_
6x	`	a	b	c	d	e	f	g	h	i	j	k	l	m	n	o
7x	p	q	r	s	t	u	v	w	x	y	z	{	|	}	~	Del
8x	€	Sh↓	Sh↑	Ins	Ent (keyp)	F1	F2	F3	F4	F5	F6	F7	F8	F9	F10	F11
9x	F12	Home	End	Pg Up	Pg Dwn	↑	↓	←	→	Ar↓	Ar↑	Al↓	Al↑	Cl ↓	Cl ↑	Cr ↓
Ax	Cr ↑		‘	*f*	„	…	†	‡	ˆ	‰	Š	‹	Ś	‹	Œ	
Bx	°	±	²	³	´	µ	¶	·	¸	¹	º	»	¼	½	¾	¿
Cx	À	Á	Â	Ã	Ä	Å	Æ	Ç	È	É	Ê	Ë	Ì	Í	Î	Ï
Dx	Ð		Ò	Ó	Ô	Õ	Ö	×	Ø	Ù	Ú	Û	Ü	Ý	Þ	ß
Ex	à	á	â	ã	ä	å	æ	ç	è	é	ê	ë	ì	í	î	ï
Fx	ð	ñ	ò	ó	ô	õ	ö	÷	ø	ù	ú	û	ü	ý	þ	ÿ

Extended characters (sky blue) are sent through dedicated keys (when available in the selected country mode) or by using an Alt Mode sequence.

INTERFACE TYPE PC AT PS/2, USB-KEYBOARD OR USB-KEYBOARD FOR APPLE (CONTINUED)

Table 33. Scancode Set When Control Character is 02

	x0	x1	x2	x3	x4	x5	X6	x7	x8	x9	xA	xB	xC	xD	xE	xF
0x	Ar↓	Ar↑	Al↓	Al ↑	Cl ↓	Cl ↑	Cr ↓	Cr ↑	BS	Tab	→	S+ Tab	Enter Keypd	Enter	Ins	Pg Up
1x	Pg Dwn	Home	←	↓	↑	F6	F1	F2	F3	F4	F5	ESC	F7	F8	F9	F10
2x	Space	!	“	#	$	%	&	‘	(	)	*	+	,	-	.	/
3x	0	1	2	3	4	5	6	7	8	9	:	;	<	=	>	?
4x	@	A	B	C	D	E	F	G	H	I	J	K	L	M	N	O
5x	P	Q	R	S	T	U	V	W	X	Y	Z	[	\	]	^	_
6x	`	a	b	c	d	e	f	g	h	i	j	k	l	m	n	o
7x	p	q	r	s	t	u	v	w	x	y	z	{	|	}	~	Del
8x	€		‘	*f*	„	…	†	‡	ˆ	‰	Š	‹	Ś	‹	Œ	
9x		‘	’	“	”	•	–	—	˜	™	š	›	œ		ž	Ÿ
Ax	NBSP	¡	¢	£	¤	¥	¦	§	¨	©	ª	«	¬	-	®	¯
Bx	°	±	²	³	´	µ	¶	·	¸	¹	º	»	¼	½	¾	¿
Cx	À	Á	Â	Ã	Ä	Å	Æ	Ç	È	É	Ê	Ë	Ì	Í	Î	Ï
Dx	Ð		Ò	Ó	Ô	Õ	Ö	×	Ø	Ù	Ú	Û	Ü	Ý	Þ	ß
Ex	à	á	â	ã	ä	å	æ	ç	è	é	ê	ë	ì	í	î	ï
Fx	ð	ñ	ò	ó	ô	õ	ö	÷	ø	ù	ú	û	ü	ý	þ	ÿ

INTERFACE TYPE PC AT PS/2 ALT MODE OR USB-KEYBOARD ALT MODE

Table 34. Scancode Set When Control Character is 00 or 01

	x0	x1	x2	x3	x4	x5	X6	x7	x8	x9	xA	xB	xC	xD	xE	Xf
0x	Alt+000	Alt+001	Alt+002	Alt+003	Alt+004	Alt+005	Alt+006	Alt+007	BS	HT TAB	Alt+010	Alt+011	Alt+012	CR Enter	Alt+014	Alt+015
1x	Alt+016	Alt+017	Alt+018	Alt+019	Alt+020	Alt+021	Alt+022	Alt+023	Alt+024	Alt+025	Alt+026	ESC Esc	Alt+028	Alt+029	Alt+030	Alt+031
2x	A+032	A+033	A+034	A+035	A+036	A+037	A+038	A+039	A+040	A+041	A+042	A+043	A+044	A+045	A+046	A+047
3x	A+048	A+049	A+050	A+051	A+052	A+053	A+054	A+055	A+056	A+057	A+058	A+059	A+060	A+061	A+062	A+063
4x	A+064	A+065	A+066	A+067	A+068	A+069	A+070	A+071	A+072	A+073	A+074	A+075	A+076	A+077	A+078	A+079
5x	A+080	A+081	A+082	A+083	A+084	A+085	A+086	A+087	A+088	A+089	A+090	A+091	A+092	A+093	A+094	A+095
6x	A+096	A+097	A+098	A+099	A+100	A+101	A+102	A+103	A+104	A+105	A+106	A+107	A+108	A+109	A+110	A+111
7x	A+112	A+113	A+114	A+115	A+116	A+117	A+118	A+119	A+120	A+121	A+122	A+123	A+124	A+125	A+126	A+127
8x	€	Sh↓	Sh↑	Ins	Ent (keyp)	F1	F2	F3	F4	F5	F6	F7	F8	F9	F10	F11
9x	F12	Home	End	Pg Up	Pg Dwn	↑	↓	←	→	Ar↓	Ar↑	Al↓	Al ↑	Cl ↓	Cl ↑	Cr ↓
Ax	Cr ↑	A+0161	A+0162	A+0163	A+0164	A+0165	A+0166	A+0167	A+0168	A+0169	A+0170	A+0171	A+0172	A+0173	A+0174	A+0175
Bx	A+0176	A+0177	A+0178	A+0179	A+0180	A+0181	A+0182	A+0183	A+0184	A+0185	A+0186	A+0187	A+0188	A+0189	A+0190	A+0191
Cx	A+0192	A+0193	A+0194	A+0195	A+0196	A+0197	A+0198	A+0199	A+0200	A+0201	A+0202	A+0203	A+0204	A+0205	A+0206	A+0207
Dx	A+0208	A+0209	A+0210	A+0211	A+0212	A+0213	A+0214	A+0215	A+0216	A+0217	A+0218	A+0219	A+0220	A+0221	A+0222	A+0223
Ex	A+0224	A+0225	A+0226	A+0227	A+0228	A+0229	A+0230	A+0231	A+0232	A+0233	A+0234	A+0235	A+0236	A+0237	A+0238	A+0239
Fx	A+0240	A+0241	A+0242	A+0243	A+0244	A+0245	A+0246	A+0247	A+0248	A+0249	A+0250	A+0251	A+052	A+0253	A+0254	A+0255

INTERFACE TYPE PC AT PS/2 ALT MODE OR USB-KEYBOARD ALT MODE (CONTINUED)

Table 35. Scancode Set When Control Character is 02

	x0	x1	x2	x3	x4	x5	X6	x7	x8	x9	xA	xB	xC	xD	xE	xF
0x	Ar↓	Ar↑	Al↓	Al ↑	Cl ↓	Cl ↑	Cr ↓	Cr ↑	BS	Tab	→	S+ Tab	Enter Keypd	Enter	Ins	Pg Up
1x	Pg Dwn	Home	←	↓	↑	F6	F1	F2	F3	F4	F5	ESC	F7	F8	F9	F10
2x	A+032	A+033	A+034	A+035	A+036	A+037	A+038	A+039	A+040	A+041	A+042	A+043	A+044	A+045	A+046	A+047
3x	A+048	A+049	A+050	A+051	A+052	A+053	A+054	A+055	A+056	A+057	A+058	A+059	A+060	A+061	A+062	A+063
4x	A+064	A+065	A+066	A+067	A+068	A+069	A+070	A+071	A+072	A+073	A+074	A+075	A+076	A+077	A+078	A+079
5x	A+080	A+081	A+082	A+083	A+084	A+085	A+086	A+087	A+088	A+089	A+090	A+091	A+092	A+093	A+094	A+095
6x	A+096	A+097	A+098	A+099	A+100	A+101	A+102	A+103	A+104	A+105	A+106	A+107	A+108	A+109	A+110	A+111
7x	A+112	A+113	A+114	A+115	A+116	A+117	A+118	A+119	A+120	A+121	A+122	A+123	A+124	A+125	A+126	A+127
8x	A+0128	A+0129	A+0130	A+0131	A+0132	A+0133	A+0134	A+0135	A+0136	A+0137	A+0138	A+0139	A+0140	A+0141	A+0142	A+0143
9x	A+0144	A+0145	A+0146	A+0147	A+0148	A+0149	A+0150	A+0151	A+0152	A+0153	A+0154	A+0155	A+0156	A+0157	A+0158	A+0159
Ax	A+0160	A+0161	A+0162	A+0163	A+0164	A+0165	A+0166	A+0167	A+0168	A+0169	A+0170	A+0171	A+0172	A+0173	A+0174	A+0175
Bx	A+0176	A+0177	A+0178	A+0179	A+0180	A+0181	A+0182	A+0183	A+0184	A+0185	A+0186	A+0187	A+0188	A+0189	A+0190	A+0191
Cx	A+0192	A+0193	A+0194	A+0195	A+0196	A+0197	A+0198	A+0199	A+0200	A+0201	A+0202	A+0203	A+0204	A+0205	A+0206	A+0207
Dx	A+0208	A+0209	A+0210	A+0211	A+0212	A+0213	A+0214	A+0215	A+0216	A+0217	A+0218	A+0219	A+0220	A+0221	A+0222	A+0223
Ex	A+0224	A+0225	A+0226	A+0227	A+0228	A+0229	A+0230	A+0231	A+0232	A+0233	A+0234	A+0235	A+0236	A+0237	A+0238	A+0239
Fx	A+0240	A+0241	A+0242	A+0243	A+0244	A+0245	A+0246	A+0247	A+0248	A+0249	A+0250	A+0251	A+052	A+0253	A+0254	A+0255

DIGITAL INTERFACE

Table 36. Scancode Set When Control Character is 00 or 01

	X0	x1	x2	x3	x4	x5	x6	x7	x8	x9	xA	xB	xC	xD	xE	xF
0x	NULL C+@	SOH C(S)+A	STX C(S)+B	ETX C(S)+C	EOT C+D	ENQ C(S)+E	ACK C(S)+F	BEL C(S)+G	BS	HT TAB	LF C(S)+J	VT C(S)+K	FF C(S)+L	CR Enter	SO C(S)+N	SI C(S)+O
1x	DLE C(S)+P	DC1 C(S)+Q	DC2 C(S)+R	DC3 C(S)+S	DC4 C(S)+T	NAK C(S)+U	SYN C(S)+V	ETB C(S)+W	CAN C(S)+X	EM C(S)+Y	SUB C(S)+Z	ESC Esc	FS C(S)+\	GS C+]	RS C(S)+^	US C(S)+_
2x	Space	!	“	#	$	%	&	‘	(	)	*	+	,	-	.	/
3x	0	1	2	3	4	5	6	7	8	9	:	;	<	=	>	?
4x	@	A	B	C	D	E	F	G	H	I	J	K	L	M	N	O
5x	P	Q	R	S	T	U	V	W	X	Y	Z	[	\	]	^	_
6x	`	a	b	c	d	e	f	g	h	i	j	k	l	m	n	o
7x	p	q	r	s	t	u	v	w	x	y	z	{	|	}	~	Del
8x		Sh↓	Sh↑	Ins	Ent (keyp)	F1	F2	F3	F4	F5	F6	F7	F8	F9	F10	F11
9x	F12	F13	F14	F15	F16	↑	↓	←	→					Cl ↓	Cl ↑	

Table 37. Scancode Set When Control Character is 02

	X0	x1	x2	x3	x4	x5	x6	x7	x8	x9	xA	xB	xC	xD	xE	xF
0x					Cl ↓	Cl ↑			BS	Tab	à	S+ Tab	Enter Keypd	Enter	Ins	
1x			←	↓	↑	F6	F1	F2	F3	F4	F5	ESC	F7	F8	F9	F10
2x	Space	!	“	#	$	%	&	‘	(	)	*	+	,	-	.	/
3x	0	1	2	3	4	5	6	7	8	9	:	;	<	=	>	?
4x	@	A	B	C	D	E	F	G	H	I	J	K	L	M	N	O
5x	P	Q	R	S	T	U	V	W	X	Y	Z	[	\	]	^	_
6x	`	a	b	c	d	e	f	g	h	i	j	k	l	m	n	o
7x	p	q	r	s	t	u	v	w	x	y	z	{	|	}	~	Del

IBM31XX 102-KEY

Table 38. Scancode Set When Control Character is 00 or 01

	X0	x1	x2	x3	x4	x5	x6	x7	x8	x9	xA	xB	xC	xD	xE	xF
0x	NULL C+@	SOH C(S)+A	STX C(S)+B	ETX C(S)+C	EOT C+D	ENQ C(S)+E	ACK C(S)+F	BEL C(S)+G	BS	HT TAB	LF C(S)+J	VT C(S)+K	FF C(S)+L	CR Enter	SO C(S)+N	SI C(S)+O
1x	DLE C(S)+P	DC1 C(S)+Q	DC2 C(S)+R	DC3 C(S)+S	DC4 C(S)+T	NAK C(S)+U	SYN C(S)+V	ETB C(S)+W	CAN C(S)+X	EM C(S)+Y	SUB C(S)+Z	ESC Esc	FS C(S)+\	GS C+]	RS C(S)+^	US C(S)+_
2x	Space	!	“	#	$	%	&	‘	(	)	*	+	,	-	.	/
3x	0	1	2	3	4	5	6	7	8	9	:	;	<	=	>	?
4x	@	A	B	C	D	E	F	G	H	I	J	K	L	M	N	O
5x	P	Q	R	S	T	U	V	W	X	Y	Z	[	\	]	^	_
6x	‘	a	B	c	d	e	f	g	h	i	j	k	l	m	n	o
7x	p	q	R	s	t	u	v	w	x	y	z	{	|	}		Del
8x		Sh↓	Sh↑	Ins	Ent (keyp)	F1	F2	F3	F4	F5	F6	F7	F8	F9	F10	F11
9x	F12	Enter	Reset	Insert	Delete	Field -	Field +	Enter paddle	Printl	Ar↓	Ar↑	Al↓	Al ↑	Cl ↓	Cl ↑	Cr ↓
Ax	Cr ↑															

Table 39. Scancode Set When Control Character is 02

	X0	x1	x2	x3	x4	x5	x6	x7	x8	x9	xA	xB	xC	xD	xE	xF
0x	Ar↓	Ar↑	Al↓	Al ↑	Cl ↓	Cl ↑	Cr ↓	Cr ↑	BS	Tab	→	S+ Tab	Enter Keypd	Enter	Ins	Pg Up
1x	Pg Dwn	Home	←	↓	↑	F6	F1	F2	F3	F4	F5	ESC	F7	F8	F9	F10
2x	Space	!	“	#	$	%	&	‘	(	)	*	+	,	-	.	/
3x	0	1	2	3	4	5	6	7	8	9	:	;	<	=	>	?
4x	@	A	B	C	D	E	F	G	H	I	J	K	L	M	N	O
5x	P	Q	R	S	T	U	V	W	X	Y	Z	[	\	]	^	_
6x	‘	a	B	c	d	e	f	g	h	i	j	k	l	m	n	o
7x	p	q	R	s	t	u	v	w	x	y	z	{	|	}		Del

IBM XT

Table 40. Scancode Set When Control Character is 00 or 01

	X0	x1	x2	x3	x4	x5	x6	x7	x8	x9	xA	xB	xC	xD	xE	xF
0x	NULL C+@	SOH C(S)+A	STX C(S)+B	ETX C(S)+C	EOT C+D	ENQ C(S)+E	ACK C(S)+F	BEL C(S)+G	BS C(S)+H	HT TAB	LF C(S)+J	VT C(S)+K	FF C(S)+L	CR Enter	SO C(S)+N	SI C(S)+O
1x	DLE C(S)+P	DC1 C(S)+Q	DC2 C(S)+R	DC3 C(S)+S	DC4 C(S)+T	NAK C(S)+U	SYN C(S)+V	ETB C(S)+W	CAN C(S)+X	EM C(S)+Y	SUB C(S)+Z	ESC Esc	FS C(S)+\	GS C+]	RS C(S)+^	US C(S)+_
2x	Space	!	“	#	$	%	&	‘	(	)	*	+	,	-	.	/
3x	0	1	2	3	4	5	6	7	8	9	:	;	<	=	>	?
4x	@	A	B	C	D	E	F	G	H	I	J	K	L	M	N	O
5x	P	Q	R	S	T	U	V	W	X	Y	Z	[	\	]	^	_
6x	‘	a	B	c	d	e	f	g	h	i	j	k	l	m	n	o
7x	p	q	R	s	t	u	v	w	x	y	z	{	|	}		Del
8x		Sh↓	Sh↑	Ins	Ent (keyp)	F1	F2	F3	F4	F5	F6	F7	F8	F9	F10	F11
9x	F12	Home	End	Pg Up	Pg Dwn	↑	↓	←	→	Ar↓	Ar↑	Al↓	Al ↑	Cl ↓	Cl ↑	Cr ↓
Ax	Cr ↑															

Table 41. Scancode Set when Control Character 02

	X0	x1	x2	x3	x4	x5	x6	x7	x8	x9	xA	xB	xC	xD	xE	xF
0x	Ar↓	Ar↑	Al↓	Al ↑	Cl ↓	Cl ↑	Cr ↓	Cr ↑	BS	Tab	→	S+ Tab	Enter Keypd	Enter	Ins	Pg Up
1x	Pg Dwn	Home	←	↓	↑	F6	F1	F2	F3	F4	F5	ESC	F7	F8	F9	F10
2x	Space	!	“	#	$	%	&	‘	(	)	*	+	,	-	.	/
3x	0	1	2	3	4	5	6	7	8	9	:	;	<	=	>	?
4x	@	A	B	C	D	E	F	G	H	I	J	K	L	M	N	O
5x	P	Q	R	S	T	U	V	W	X	Y	Z	[	\	]	^	_
6x	‘	a	B	c	d	e	f	g	h	i	j	k	l	m	n	o
7x	p	q	R	s	t	u	v	w	x	y	z	{	|	}		Del

APPENDIX F
ACCESSORIES

PM-BASE-GD46-BK PRESENTATION MODE BASE

General Features

The presentation mode base PM-BASE-GD46-BK is a foot support, designed to be an implementable accessory for the Gryphon™ GD4600 bar code reader.





Stand Mode/Object Detection

Scan the below programming bar code to set the Stand Mode/Object Detection mode.

No trigger pull is required to read a bar code. Scanning turns on automatically when an item is placed in reader's field of view. While in a stand watch state, the reader illumination LED goes from dim to maximum bright.

Corded Stand Mode = Disable

Corded Stand Mode = Enable

Video Tutorial

Mounting Instructions

To mount the presentation mode base, please follow the steps described below:

The visible screw on the bracket must be loosened and the foot support cap lowered, as shown in Figure 1.



Figure 1

1. To insert the Gryphon™ GD4600 bar code reader, enter the foot support with a downward and then backward movement (Figure 2).



Figure 2

2. Once the Gryphon™ is correctly inserted, the foot support cap can be lifted and the screw tightened.
3. To remove the Gryphon™ from the presentation mode base, loosen the screw, slide the foot support cap down and then release the Gryphon™ in a right-to-left or vice versa movement (Figure 3).



Figure 3

WLC4690 CART CLIP

General Features

The WLC4690 Cart Clip is an attachable accessory for the Gryphon 4600 WLC4690 base station. It provides a secure mechanical hold for the reader, offering enhanced retention that makes it ideal for medical carts, self-checkout systems, and other wall-mounted setups.





Video Tutorial

Mounting Instructions

Mounting Option 1

1. Insert the cart clip into the base station as shown below.

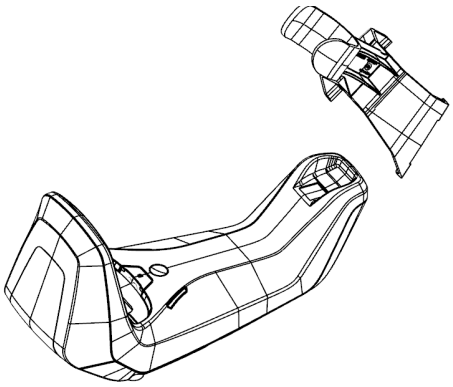

2. Slide the cart clip into the matching slots on the base station.

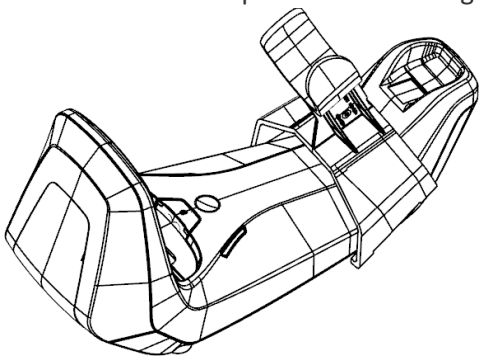

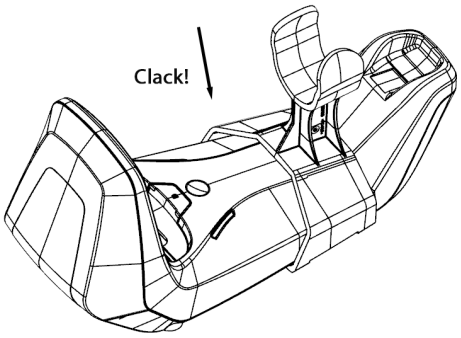

Mounting Option 2

1. Directly attach the cart clip to the base station.

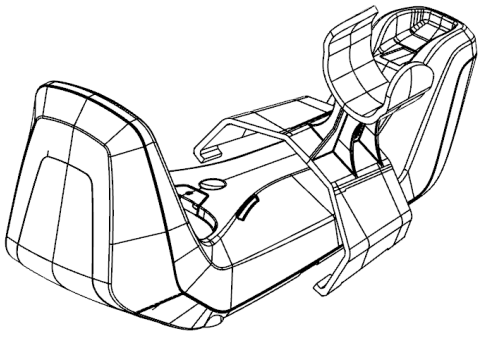

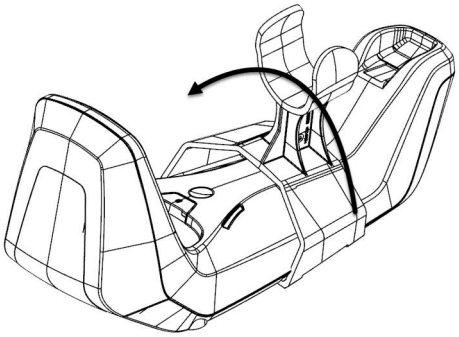

2. Secure the cart clip into the matching slots on the base station.

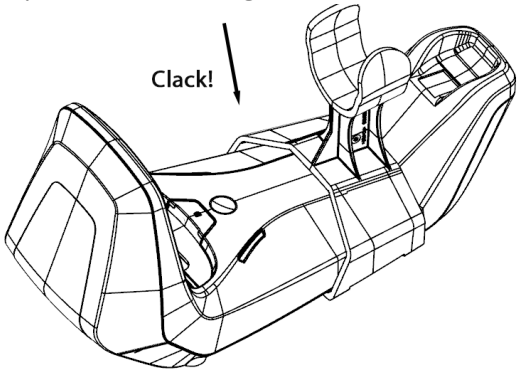

WLC4690 BRACKET ADAPTER (COMPATIBLE WITH WLC4190 MOUNTING SYSTEM)

General Features

The WLC4690 Bracket Adapter is an attachable accessory for the Gryphon 4600 WLC4690 base station. It enables the use of the same mounting system (with a metal plate) as the previous generation of Gryphon base stations..





Video Tutorial

Mounting Instructions

1. Secure the metal bracket in the desired position using 4 screws.

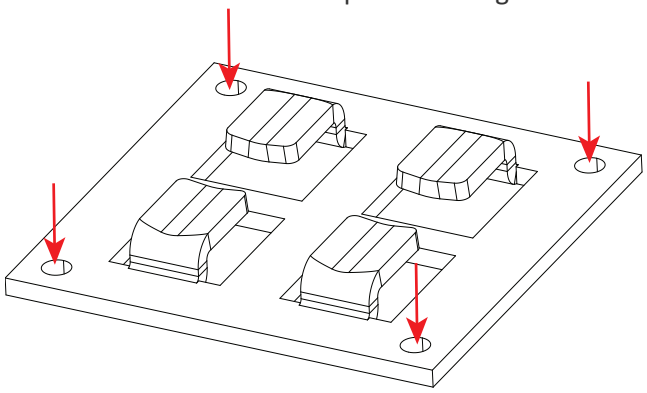

2. Secure the cradle into the two hooks of the accessory.

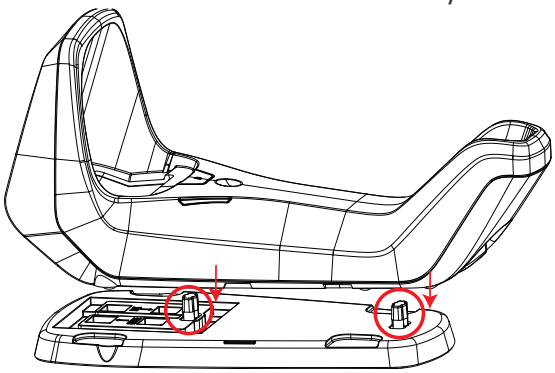

3. Slide the cradle on the accessory until you hear a click and can see that they are properly aligned, as shown in the circle below.

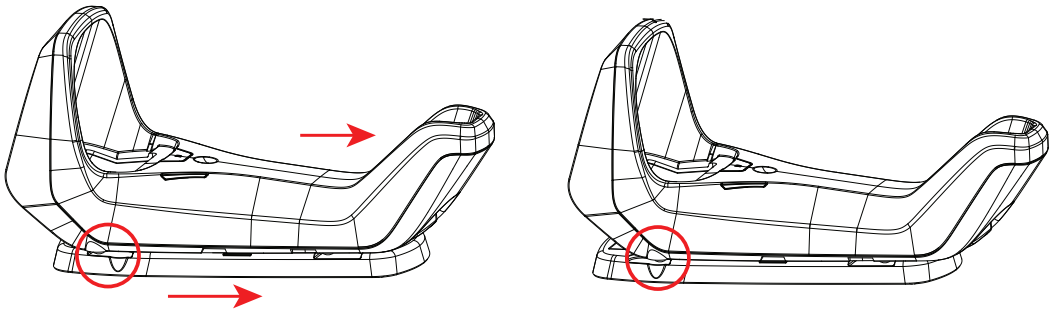

4. Attach the WLC4690 base station, together with the accessory, to the metal bracket by aligning it in the correct position and sliding it into place until it locks.

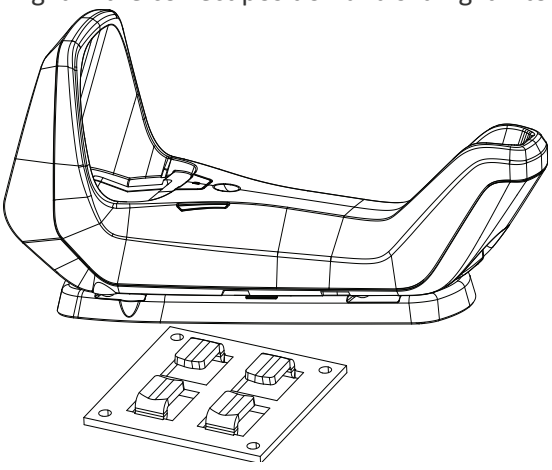

WLC4690 PRESENTATION MODE ENABLER AND BRACKET ADAPTER

General Features

The WLC4690 Presentation Mode Enabler and Bracket Adapter is an attachable accessory for the Gryphon 4600 WLC4690 base station. It enables compatibility with the same metal-plate mounting system used in previous generations of Gryphon base stations. In addition, it allows barcode reading while the scanner is docked, offering four selectable positions through its dedicated adjustment mechanism.





Video Tutorial

Mounting Instructions

1. Secure the metal bracket in the desired position using 4 screws.

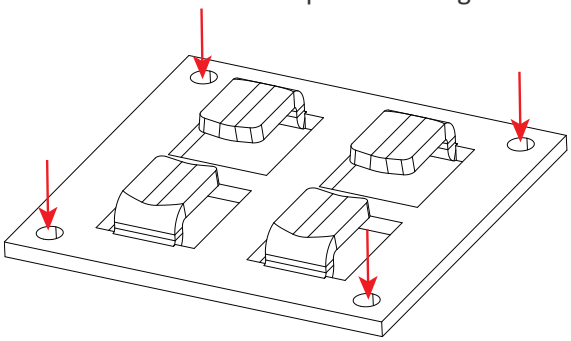

2. Secure the cradle on the 2 hooks of the accessory.

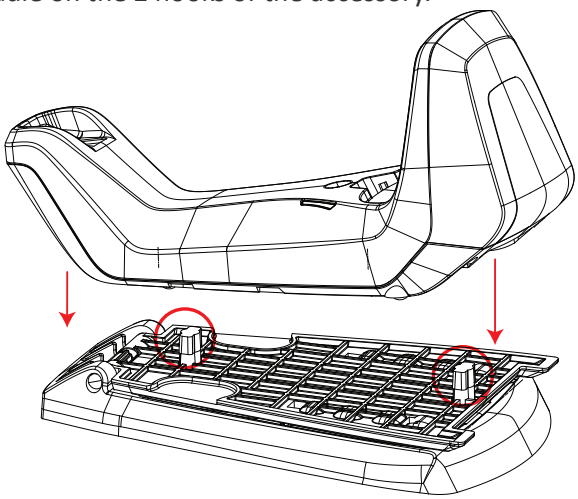

3. Slide the cradle on the accessory until you hear a click and can see that they are properly aligned, as shown in the circle below

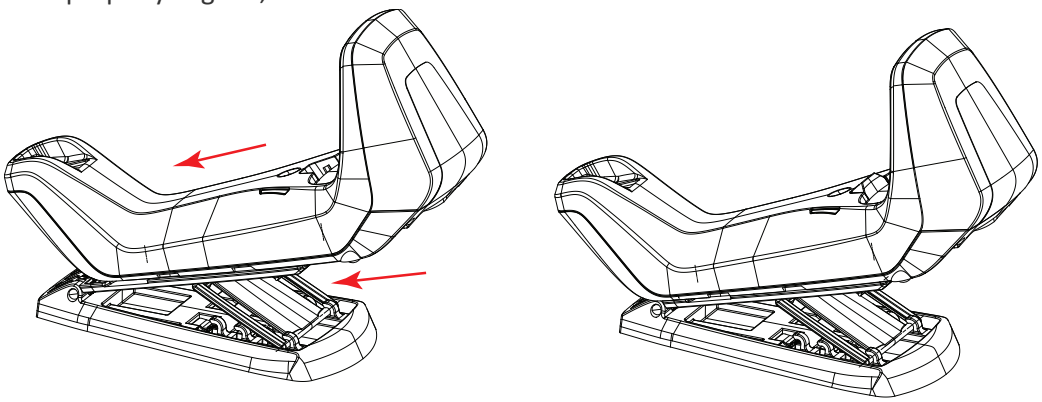

4. Fix the WLC4690 base station, together with the accessory, to the metal bracket by aligning it in the correct position and sliding it into place until it locks

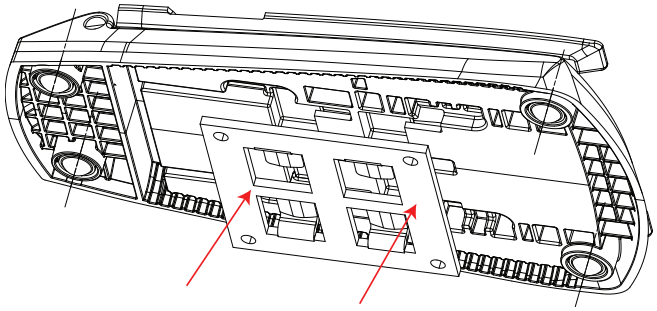

Standing Positions

Lower the position selector mechanism and lock it in the preferred hooks



Fig. 1 and 2



Fig. 3 and 4



WLC4690-S7 BRACKET ADAPTER (COMPATIBLE WITH TOSHIBA SYSTEM 7 MOUNTING SYSTEM)

General Features

The WLC4690-S7 Bracket Adapter is an attachable accessory for the Gryphon 4600 WLC4690 base station. It enables the use of the mounting system of Toshiba System 7 self checkout solution.





Video Tutorial

Mounting Instructions

1. Secure the cradle on the 2 hooks of the accessory.

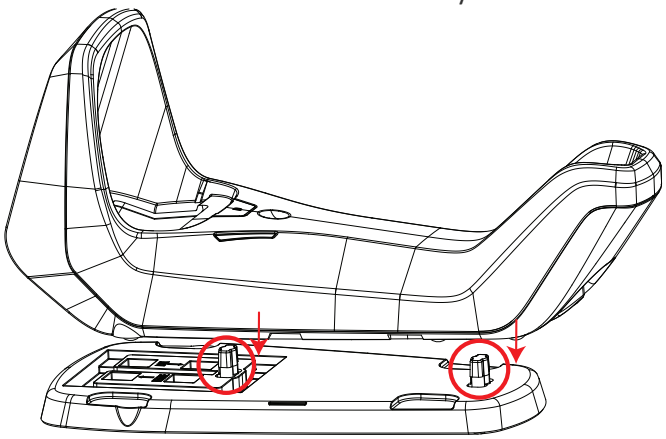

2. Slide the cradle on the accessory until you hear a click and can see that they are properly aligned, as shown in the circle below.

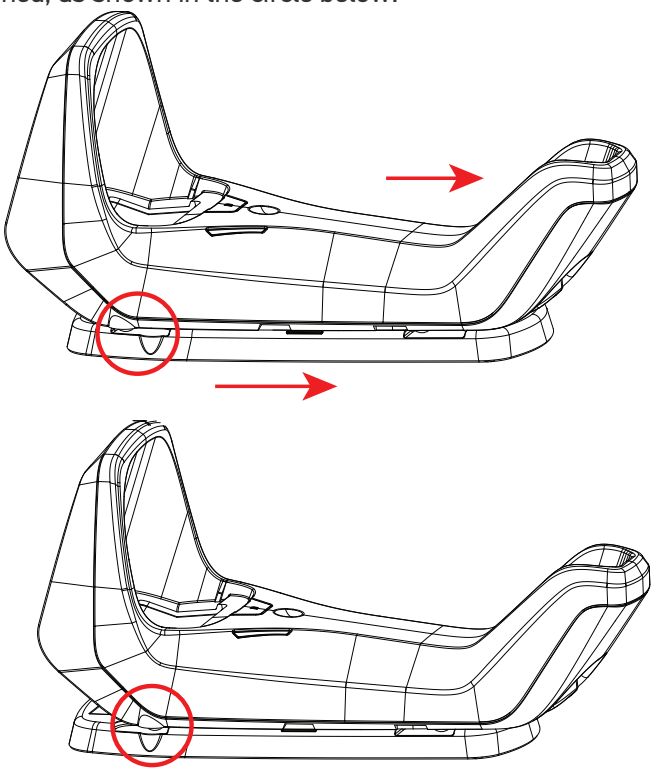

3. Attach the WLC4690 base station, together with the accessory, to the two mounting slots by aligning it in the correct position and sliding it into place until it locks..

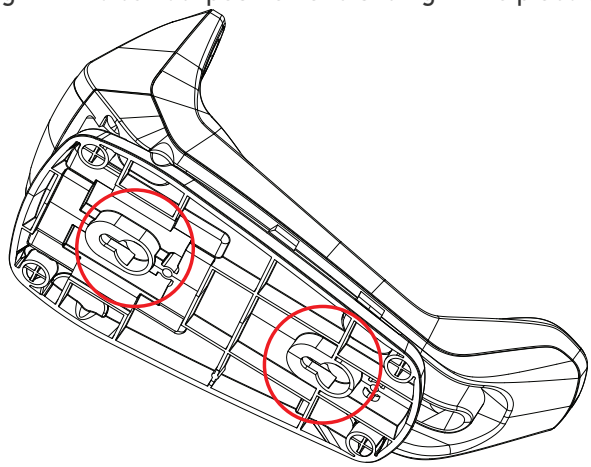

APPENDIX G
ASCII CHART

ASCII Char.	Hex No.	ASCII Char.	Hex No.	ASCII Char.	Hex No.	ASCII Char.	Hex No.
NUL	00	SP	20	@	40	‘	60
SOH	01	!	21	A	41	a	61
STX	02	“	22	B	42	b	62
ETX	03	#	23	C	43	c	63
EOT	04	$	24	D	44	d	64
ENQ	05	%	25	E	45	e	65
ACK	06	&	26	F	46	f	66
BEL	07	’	27	G	47	g	67
BS	08	(	28	H	48	h	68
HT	09	)	29	I	49	i	69
LF	0A	*	2A	J	4A	j	6A
VT	0B	+	2B	K	4B	k	6B
FF	0C	,	2C	L	4C	l	6C
CR	0D	-	2D	M	4D	m	6D
SO	0E	.	2E	N	4E	n	6E
SI	0F	/	2F	O	4F	o	6F
DLE	10	0	30	P	50	p	70
DC1	11	1	31	Q	51	q	71
DC2	12	2	32	R	52	r	72
DC3	13	3	33	S	53	s	73
DC4	14	4	34	T	54	t	74
NAK	15	5	35	U	55	u	75
SYN	16	6	36	V	56	v	76
ETB	17	7	37	W	57	w	77
CAN	18	8	38	X	58	x	78
EM	19	9	39	Y	59	y	79
SUB	1A	:	3A	Z	5A	z	7A
ESC	1B	;	3B	[	5B	{	7B
FS	1C	<	3C	\	5C	|	7C
GS	1D	=	3D	]	5D	}	7D
RS	1E	>	3E	^	5E	~	7E
US	1F	?	3F	_	5F	DEL	7F

© 2026 Datalogic S.p.A. and /or its affiliates • All rights reserved • Without limiting the rights under copyright, no part of this documentation may be reproduced, stored in or introduced into a retrieval system, or transmitted in any form or by any means, or for any purpose, without the express written permission of Datalogic S.p.A. and/or its affiliates • Datalogic and the Datalogic logo are registered trademarks of Datalogic S.p.A. in many countries, including the U.S. and the E.U.

DATALOGIC

www.datalogic.com

Datalogic S.r.l.
Via S. Vitalino, 13 | 40012 Calderara di Reno | Bologna - Italy
Tel. +39 051 3147011 | Fax +39 051 3147205

800000600 (Rev. D) July 2026