GARMIN®

ALPHA® TT™ 25

GPS Dog Tracking and Training Collar



Owner's Manual

Visit Gun Dog Supply.com
Order a Garmin TT25 Beeper Collar
See other Garmin Products

Table of Contents

Getting Started..... 3

Dog Collar Device.....3
Dog Collar Device Status LED..... 3
Turning On the Device.....3
Turning Off the Device..... 3
Charging the Dog Collar Device.....4
Acquiring Satellite Signals..... 4
Adding a Dog to the Alpha® Navigator Using Wireless Pairing..... 4
Selecting and Installing the Contact Points.....4
Removing the Contact Points..... 5
Fitting the Collar on Your Dog..... 5

Dog Tracking and Training.....7

Dog Tracking..... 7
Dog Training..... 7
Collar Training.....7
Training Methods.....7
Communication with the Dog Collar Device..... 8
Using a Dynamic Update Rate.....8
Using Sleep Mode..... 8

Device Information..... 9

Product Updates.....9
Setting Up Wi-Fi® for the Dog Collar Device..... 9
Setting Up Garmin Express™..... 9
Connecting the Dog Collar Device to a Computer.....9
VHF Radio Information.....9
Dog Collar Device Specifications.....9

Appendix..... 11

Purchasing Accessories..... 11
Beeper Battery Pack Accessory.....11
Installing the Beeper Battery Pack...11
Beeper Settings..... 12
Introducing Your Dog to the Beeper Battery Pack.....12
Beeper Battery Pack Specifications..... 12
Replacing the Dog Collar Battery Pack.....12
Replacing the Dog Collar Flex Band.... 13
Replacing the Dog Collar Strap..... 14
Replacing the Dog Collar VHF Antenna..... 14

Getting Started

⚠ WARNING

See the *Important Safety and Product Information* guide in the product box for product warnings and other important information.

Dog Collar Device

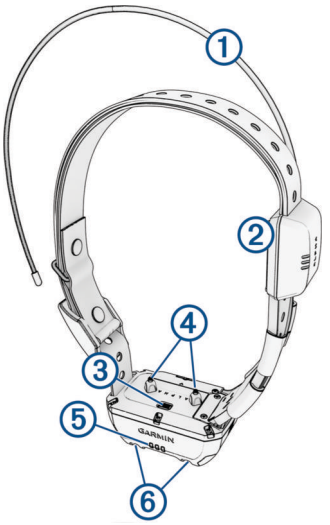

1	VHF antenna
2	GPS antenna
3	Power button
4	Contact points
5	Status LED
6	Flashing beacon LEDs

Dog Collar Device Status LED

LED Activity	Status
Flashing red	The dog collar device is not connected.
Flashing blue	The dog collar device is in pairing mode.
Flashing yellow	The dog collar device is connected and satellite signals have not been acquired.
Flashing green	The dog collar device is connected and satellite signals are acquired.
Flashing magenta	The dog collar device is in sleep mode.
Solid red	When connected to a power cable, the dog collar device is charging.
Solid green	When connected to a power cable, the dog collar device is fully charged.

Turning On the Device

- On the dog collar device, hold the power button until the status LED flashes and the collar beeps.

Turning Off the Device

Hold the power button until the status LED turns solid red.
The dog collar device beeps and turns off.

Charging the Dog Collar Device

NOTICE

To prevent corrosion, thoroughly dry the contacts on the dog collar device and the surrounding area before connecting the charging clip.

You should fully charge the battery before you use the dog collar device for the first time. Charging a fully depleted battery takes about five hours.

1 Snap the charging clip ① onto the dog collar device ②.

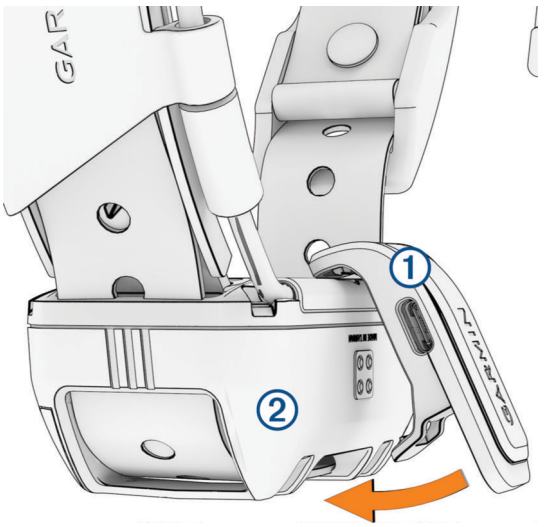

2 Plug the small end of the power cable into the USB port on the charging clip.

3 Plug the power cable into a power source.

The status LED is solid red when the collar is charging.

4 After the status LED turns solid green, remove the charging clip from the collar.

Acquiring Satellite Signals

Both the dog collar device and navigator must acquire satellite signals before you put the dog collar device on your dog. Acquiring satellites can take a few minutes.

1 Go outdoors to an open area.

2 Turn on both devices.

in the status bar shows the GPS signal strength.

When the dog collar device has acquired satellite signals, the status LED flashes green.

Adding a Dog to the Alpha® Navigator Using Wireless Pairing

To pair wirelessly, the dog collar device must be within range of the Alpha navigator.

1 Hold the power button on the dog collar device until the device emits two series of beeps (about 2 seconds), and then release the power button.

The status LED flashes blue. The dog collar device is now ready to be paired with a navigator.

2 On the navigator, select **Dog List** > **Add Dog**.

3 Select **Pair Collar**, and follow the on-screen instructions.

4 After successfully adding the dog collar device, enter the name of the dog, and select ✔.

5 Select a beacon color for this dog collar device, and select ✔.

Selecting and Installing the Contact Points

⚠ CAUTION

To prevent irritation from the contact points, remove the collar for at least eight hours out of every 24-hour period.

Do not spray the device or collar with harsh chemicals including but not limited to flea or tick spray. Always ensure that any flea or tick spray that is applied to the dog is completely dry before placing the collar on the dog. Small amounts of harsh chemicals can damage the plastic components and collar strap.

For best results, select the correct contact points based on your dog's coat.

1. Select the correct contact point length for your dog's coat type:
   - For dogs with thicker coats, use the longer contact points.
   - For dogs with shorter coats, use the shorter contact points.
2. If necessary, use the included wrench to remove the contact points.
3. Twist the contact points into the collar.
4. Tighten with the included wrench, but do not overtighten.

When you put the collar on the dog, make sure the contact points are tight against the neck.

Removing the Contact Points

When you are not training the dog using the training buttons, remove the contact points.

Use the included wrench to remove both contact points.

Fitting the Collar on Your Dog

⚠ CAUTION

To prevent irritation from the contact points, remove the collar for at least eight hours out of every 24-hour period.

This device is not intended for human use. Do not attempt to use on any person.

Do not spray the device or collar with harsh chemicals including but not limited to flea or tick spray. Always ensure that any flea or tick spray that is applied to the dog is completely dry before placing the collar on the dog. Small amounts of harsh chemicals can damage the plastic components and collar strap.

Before you can put the collar on the dog, you must pair the navigator and dog collar device (*Adding a Dog to the Alpha® Navigator Using Wireless Pairing*, page 4), and acquire satellite signals (*Acquiring Satellite Signals*, page 4).

In order to effectively train the dog, the collar must fit the dog properly. If the collar is too loose or positioned incorrectly, stimulation may be inconsistent. This can delay or prevent successful training.

1. Position the collar with the communication antenna pointing up, the GPS antenna facing up, the LEDs facing forward, and the contact points against the neck.
2. Place the collar around the middle of the dog's neck.
3. Tighten the strap so that it is snug around the dog's neck, and fasten the buckle.

   NOTE: The collar should fit tightly and should not be able to rotate or slide on the dog's neck. The dog must be able to swallow food and water normally. You should observe your dog's behavior to verify that the collar is not too tight.

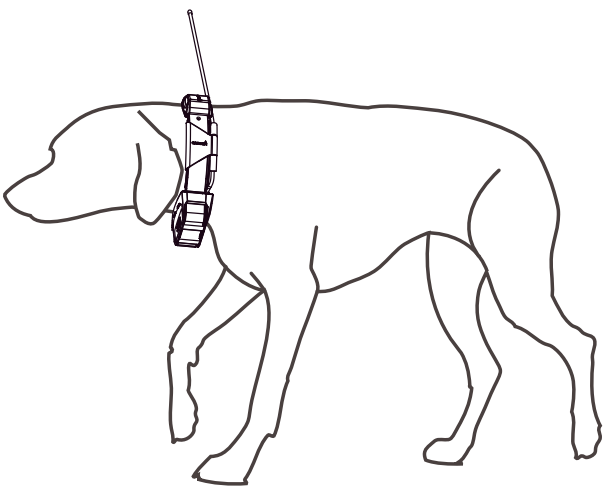

4. Wiggle the device to work the contact points through the dog's coat.

   NOTE: The contact points must have contact with the dog's skin to be effective.

5 If the strap is too long, cut off the excess, leaving at least 7.62 cm (3 in.) to spare.
TIP: You can mark the hole used to fasten the buckle for future reference.

Dog Tracking and Training

One navigator can track multiple dog collar devices and other navigators.

Dog Tracking

The navigator allows you to track your dog or multiple dogs, using the tracking compass or map. The map displays your location and your dog's location and tracks. The compass pointer indicates the direction of the dog's current location.

Dog Training

NOTICE

You should research and investigate the training methods best suited for you, your dog, and your needs. This manual provides some basic guidelines for training, but each dog has unique training needs.

When used properly, the Alpha® training system is a very effective training tool to aid your dog in reaching its full potential. The use of the training system should be part of an overall training program.

Begin training your dog on a leash, without the Alpha training system. You should train your dog how to heel, sit, and come to you. After the dog understands these three basic commands, you can begin training with the dog collar device and the leash. Finally, when the dog consistently obeys commands using the leash and collar, you may be able to remove the leash to train with only the dog collar device.

Collar Training

Begin training your dog on a leash, without using the Alpha® training system. After the dog shows a grasp of the commands "heel," "sit," and "here," you can begin training with the collar and the leash.

During the initial stage of collar introduction, the dog learns that collar stimulation means the same thing as a tug on the leash. At first, the dog may be alarmed by the electronic stimulation. The key is to be patient and consistent and not to start off at too high of an intensity. Be fair and consistent, and use repetition and praise when using the collar as a training tool.

If the dog does not respond to the stimulation level you have selected, increase the stimulation one level at a time until you achieve the appropriate response. After you achieve the desired response, you can lower the stimulation level as long as the dog maintains consistency.

As the dog becomes more proficient with the commands, you can begin to introduce distractions, such as rolling a ball in front of the dog or walking him in the presence of others.

After the dog begins to respond consistently to the command during collar training, you can remove the leash and train with just the collar.

NOTE: You should train without a leash only when it is appropriate for your environment and your dog's temperament. You should follow all laws and regulations for your area regarding the use of dog leashes.

Eventually in most training situations, your commands will not require stimulation to be given with the command. You should only use stimulation when you need to repeat a command because the dog did not obey the first one.

As the dog becomes better trained, you can decrease the use of collar training. Continue to have the dog wear the collar until you feel certain that it is no longer needed to reinforce known commands. Abandoning the collar too early can lead to problems in the future.

Choosing the Correct Intensity Level

1. Set the intensity to the lowest level.
2. Observe the dog for a reaction, such as a head shake, neck movement, or just a change in expression.

   Sometimes dogs will vocalize due to the surprise of the electrical stimulation. If the dog vocalizes more than once, the intensity level is too high for beginning training.
3. If there is no reaction, increase the intensity level by one level until the dog has a slight but recognizable reaction to the stimulation.

The intensity level that causes a slight but recognizable reaction is your dog's baseline level for beginning collar training. You do not need to, and should not, apply this intensity selection test again.

After you begin training, the dog’s performance guides your intensity selection. As the dog advances in training, you may need to change the level depending upon the training situation.

Training Methods

Momentary stimulation: Applies a brief stimulation when you press the training button, regardless of how long the button is depressed.

Continuous stimulation: Applies stimulation to the dog the entire time you press the training button, for a maximum of 8 seconds. Your stimulations should typically be much shorter than 8 seconds.

Tone: Activates an audible tone the entire time you press the training button.

Vibration: Applies vibration to the dog the entire time you press the training button, for a maximum of 8 seconds. The effectiveness of vibration may vary based on the dog's temperament and experience.

Linear and Traditional Stimulation

You can use linear or traditional stimulation to customize your training experience. The default intensity method is linear, which allows progressive stimulation from level 1 to level 18. Traditional stimulation allows you to make quick changes using low, medium, and high settings within predetermined stimulation levels (1 through 6).

Communication with the Dog Collar Device

You should keep an unobstructed line of sight between your navigator and dog collar device to produce the best communication signal. To achieve the best line-of-sight conditions, you should move to the highest elevation point in your area (for example, on the top of a hill).

Best	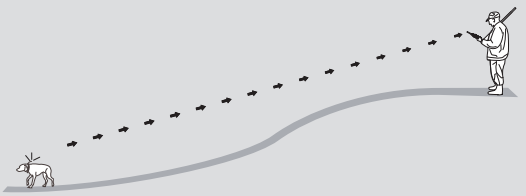
Good	
Poor	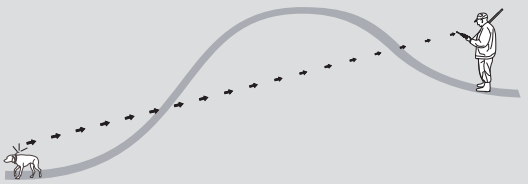

Using a Dynamic Update Rate

When you are actively tracking your dog, the dog collar device can use a dynamic update rate to help conserve battery power based on the activity of your dog.

NOTE: This feature is not available in all areas.

1. Select **Dog List**.
2. Select a dog.
3. Select **Update Rate** > **Dynamic**.

Using Sleep Mode

Before you can enter sleep mode, you must track your dog's location using the compatible dog collar device.

When paired with a navigator, the dog collar device can be put into sleep mode to conserve the battery when you are not actively tracking your dog. The status LED on the dog collar flashes purple when it is in sleep mode.

1. Select **Dog List**.
2. Select a dog.
3. Select ☰ > **Adjust Collar Sleep Mode**.
4. Select an option:
   - Select **Sleep** to enter sleep mode.
   - Select **Wake** to exit sleep mode.

Device Information

Product Updates

On your computer, install Garmin Express™ (www.garmin.com/express).

This provides easy access to these services for Garmin® devices:

- Software updates
- Product registration

Setting Up Wi-Fi® for the Dog Collar Device

When paired with a navigator that supports the setup of Wi-Fi technology on a dog collar device, the dog collar device can scan for nearby Wi-Fi networks and pair to a selected network. When the dog collar device is connected to a Wi-Fi network, it automatically checks for available software updates and installs them when the dog collar device is charging, and in range of the connected Wi-Fi network.

1. Select **Dog List**.
2. Select a dog.
3. Select ☰ > **Collar Wi-Fi Setup**, and follow the on-screen instructions.

Setting Up Garmin Express™

1. Connect the device to your computer using a USB cable.
2. Go to **garmin.com/express**.
3. Follow the on-screen instructions.

Connecting the Dog Collar Device to a Computer

NOTICE

To prevent corrosion, you should dry the contacts on the dog collar device and the surrounding area before connecting the charging clip.

1. Snap the charging clip onto the dog collar device.
2. Plug the small end of the USB cable into the USB port on the charging clip.
3. Plug the other end of the USB cable into a USB port on the computer.

VHF Radio Information

This product may be used only on specific radio frequencies, which vary depending on the country of use. The navigator and dog collar device allow the user to install a different antenna. Changing the antenna can result in improved radio performance and higher radiated power. You must not use the device with a third party antenna or an antenna not approved by Garmin®. Go to www.garmin.com/tracking-legal for details about the performance and radio frequency of this product, lawful accessories, and power limits for countries.

Dog Collar Device Specifications

Battery type	Rechargeable, replaceable lithium-ion[1] Optional extended battery box accessory available[2]
Battery life	Up to 68 hr. Up to 136 hr. with optional extended battery box accessory
Operating temperature range	From -20° to 60°C (from -4° to 140°F)
Charging temperature range	From 0° to 40°C (from 32° to 104°F)
Storage temperature range	From -20° to 70°C (from -4° to 158°F)
ANT® wireless range	Up to 10 m (32.8 ft.)
VHF radio range	Up to 14.48 km (9 mi.)
Wireless frequencies/protocols	154.40 - 162.25 MHz: < 30 dBm; 169.40 - 169.475 MHz: < 27 dBm; 2400 - 2483.5 MHz: < 20 dBm

[1] Only for use with Garmin® part number 361-00035-16.

[2] Only for use with Garmin part number 361-00148-00.

EU SAR	0,15 W/kg simultaneous trunk, 0,15 W/kg simultaneous limb
Water rating	1 ATM[3]

[3] The device withstands pressure equivalent to a depth of 10 m. For more information, go to www.garmin.com/waterrating.

Appendix

Purchasing Accessories

- Optional accessories are available at **garmin.com** or from your Garmin® dealer.

Beeper Battery Pack Accessory

The beeper battery pack emits high-volume sounds to provide information about the location and status of your dogs. You can operate the beeper battery pack remotely using the Alpha® system.

Installing the Beeper Battery Pack

Before you install the beeper battery pack, you must remove all dirt, water, and debris from the dog collar device. You must also have a small Phillips (#2) screwdriver and a small TORX® (T5) screwdriver.

1 Remove the 2 screws ① from the cover over the VHF antenna.

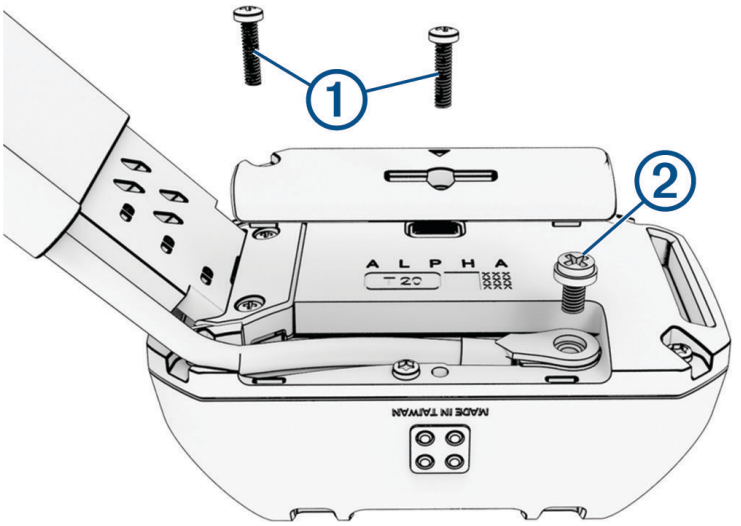

2 Remove the VHF antenna cover.

3 Remove the screw ② securing the VHF antenna to the back plate.

4 Remove the six screws ③ from the outer edges of the back plate.

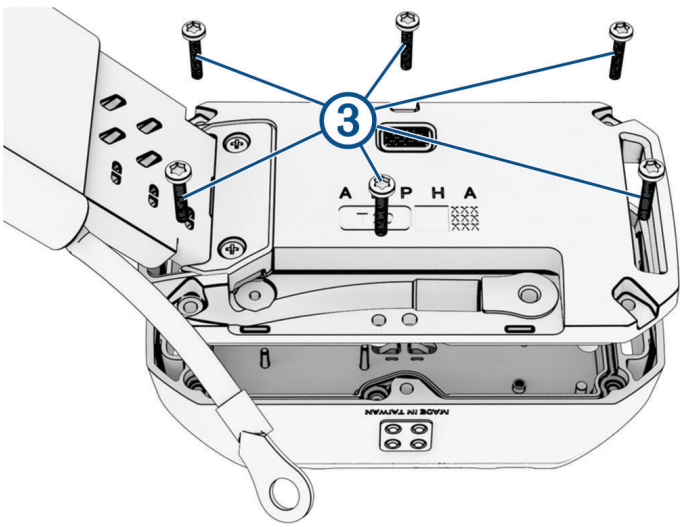

5 Note the orientation of the status LED and charging clip connectors on the standard battery pack.

NOTE: You must install the beeper battery pack in the same orientation.

6 Remove the standard battery pack.

NOTE: Ensure the gasket, or battery seal, is removed with the standard battery pack. Verify that the gasket with the beeper battery pack is not damaged and that it is completely seated in the groove.

7 Connect the beeper battery pack to the back plate, and tighten the screws.

8 Replace the screw securing the VHF antenna to the back plate.

9 Replace the cover over the VHF antenna.

10 Replace and tighten the 2 screws on the VHF antenna cover.

After you remove the old battery pack, contact your local waste disposal department to properly recycle the battery pack.

Beeper Settings

The beeper battery pack can emit one to three beeps, a hawk scream, or one lower pitched beep to indicate your dog's running, pointing, or location status. You can disable or change the sounds and volume for each status from the beeper settings on your paired handheld device.

Run Sound: Sets the sound to emit every 7.5 seconds while a dog is running.

Point Sound: Sets the sound for when a dog is on-point.

Locate Sound: Sets the sound for when you are locating a dog using a training key.

Volume: Sets the volume for all beeper sounds.

Introducing Your Dog to the Beeper Battery Pack

The beeper battery pack is loud and may startle an inexperienced dog. You should introduce your dog to the device before you use it during a hunt. You can use any of these methods to help your dog adjust to the sounds.

- Start at the lowest volume setting and slowly increase the volume of the beeper during your first use of the device on the dog.
- Turn on the device, and place it near your dog's kennel for several hours.

  This allows the dog to hear and adjust to the sounds in a comfortable location.

Beeper Battery Pack Specifications

Battery type	Rechargeable, replaceable lithium-ion[4]
Battery life	Up to 78 hr.
Operating temperature range	From -20° to 60°C (from -4° to 140°F)
Charging temperature range	From 0° to 40°C (from 32° to 104°F)
Storage temperature range	From -20° to 70°C (from -4° to 158°F)
Water rating	IPX7[5]

Replacing the Dog Collar Battery Pack

Before you replace the battery pack, you must remove all dirt, water, and debris from the dog collar device. You must also have a small Phillips (#2) screwdriver and a small TORX® (T5) screwdriver.

1 Remove the 2 screws ① from the cover over the VHF antenna.

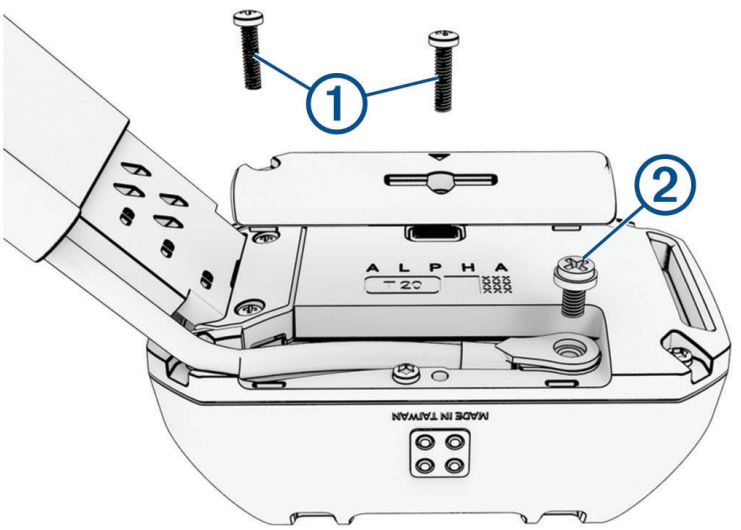

2 Remove the VHF antenna cover.

[4] Only for use with Garmin® part number 361-00148-00.

[5] The device withstands incidental exposure to water of up to 1 m for up to 30 min. For more information, go to www.garmin.com/waterrating.

3 Remove the screw ② securing the VHF antenna to the back plate.

4 Remove the six screws ③ from the outer edges of the back plate.

Note the orientation of the status LED and charging clip connectors on the battery pack. You must install the new battery pack the same way.

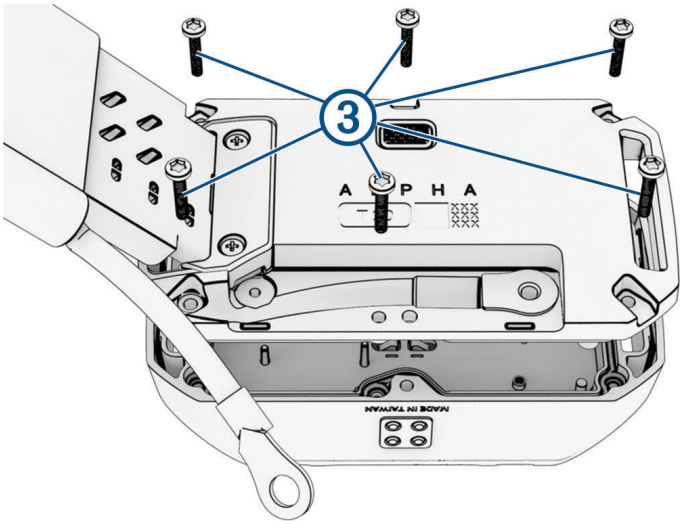

5 Remove the battery pack.

NOTE: Ensure the gasket, or battery seal, is removed with the used battery pack. Verify that the gasket with the new battery pack is not damaged and that it is completely seated in the groove.

6 Connect the new battery pack to the back plate, and tighten the screws.

7 Replace the screw securing the VHF antenna to the back plate.

8 Replace the cover over the VHF antenna.

9 Replace and tighten the 2 screws on the VHF antenna cover.

After you remove the old battery pack, contact your local waste disposal department to properly recycle the battery pack.

Replacing the Dog Collar Flex Band

Before you replace the dog collar flex band, you must remove all dirt, water, and debris from the dog collar device. You must also have a small Phillips (#2) screwdriver.

1 Remove the 2 screws ① securing the dog collar flex band to the back plate.



2 Remove the old dog collar flex band.

3 Place the new dog collar flex band on the back plate, and tighten the 2 screws to secure it.

Replacing the Dog Collar Strap

Before you replace the dog collar strap, you must remove all dirt, water, and debris from the dog collar device.

1. Pull the dog collar strap out of the antenna guide and the dog collar device.
   You may need to push and pull the dog collar strap to properly remove it.
2. Thread the new dog collar strap through the dog device and antenna guide.



Replacing the Dog Collar VHF Antenna

Before you replace the VHF antenna, you must remove all dirt, water, and debris from the dog collar device. You must also have a small Phillips (#2) screwdriver.

1. Remove the 2 screws ① from the cover over the VHF antenna.

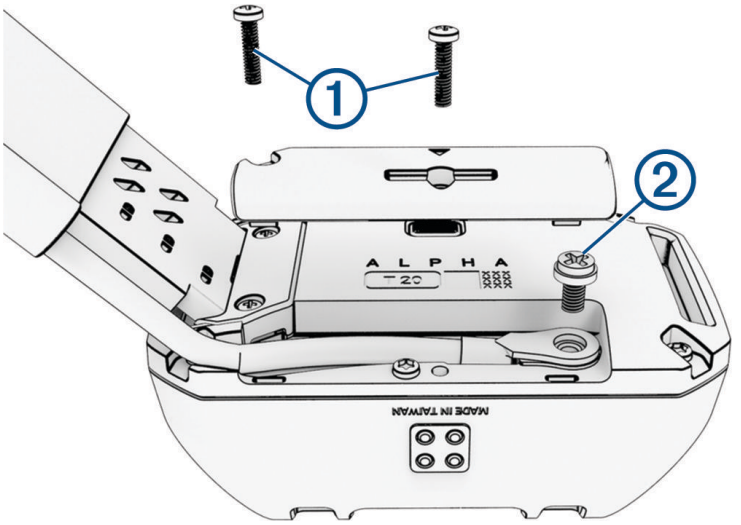

2. Remove the VHF antenna cover.
3. Remove the screw ② securing the VHF antenna to the back plate.
4. Pull the length of the antenna from the antenna guide to remove the old antenna.
5. Thread the new VHF antenna through the antenna guide.
6. Replace the screw securing the VHF antenna to the back plate.
7. Replace the cover over the VHF antenna.
8. Replace and tighten the 2 screws securing the VHF antenna cover.
9. Secure the antenna with additional antenna clips (optional).

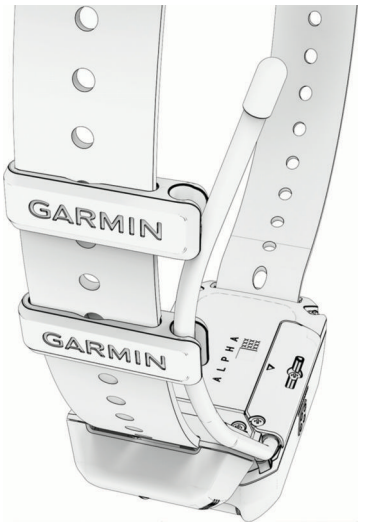
GARMIN
GARMIN
ALPHA

© 2023 Garmin Ltd. or its subsidiaries

Garmin®, the Garmin logo, and Alpha® are trademarks of Garmin Ltd. or its subsidiaries, registered in the USA and other countries. Garmin Express™ and TT™ are trademarks of Garmin Ltd. or its subsidiaries. These trademarks may not be used without the express permission of Garmin.

TORX®is a registered trademark of Acument Intellectual Properties, LLC in the United States or other countries. Wi-Fi® is a registered mark of Wi-Fi Alliance Corporation. Other trademarks and trade names are those of their respective owners.