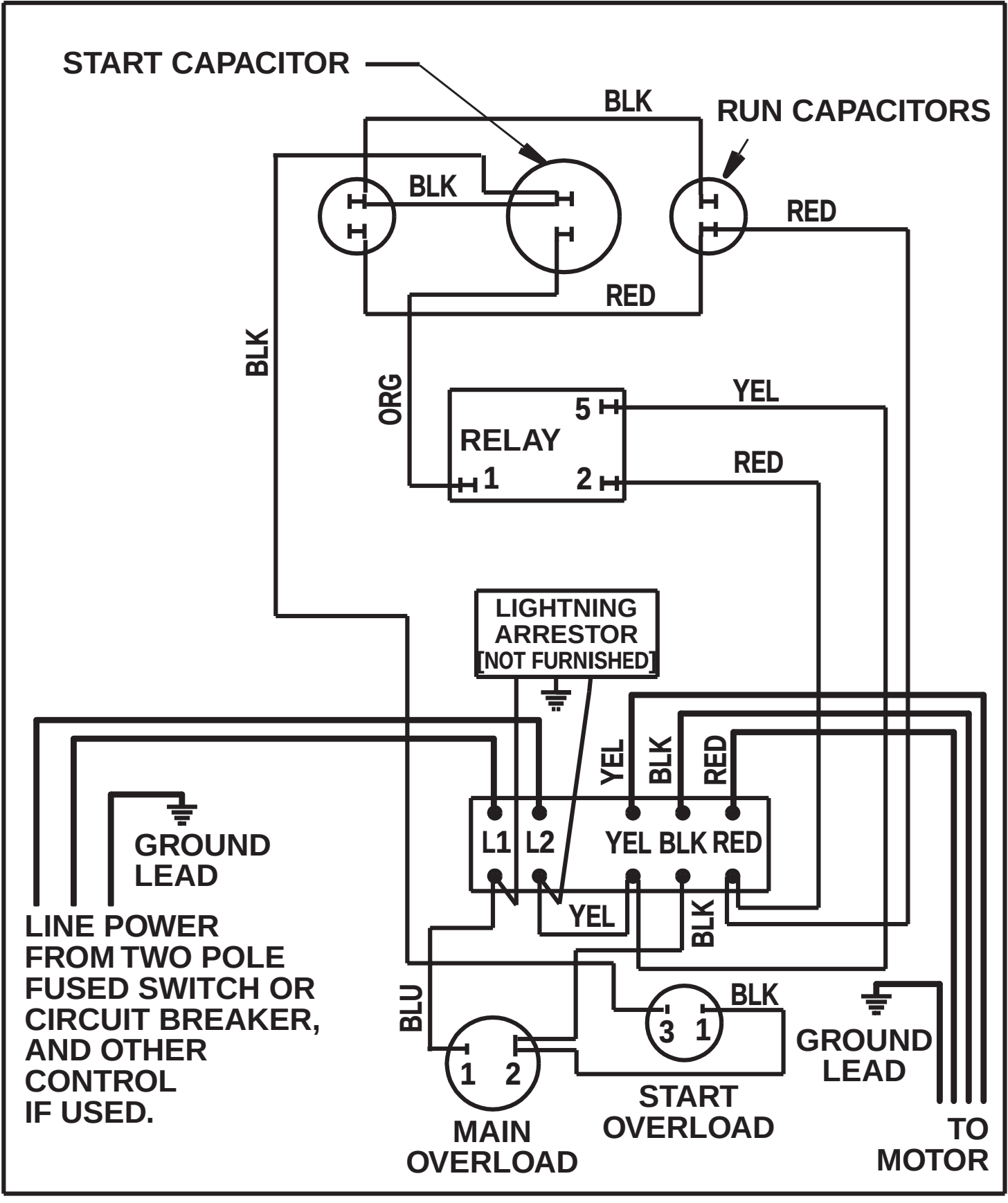

5 HP STANDARD

282 113 8110