Avocent®

SwitchView® 1000 Switch

Installer/User Guide

SwitchView® 1000 Switch

Installer/User Guide

Avocent, the Avocent logo, The Power of Being There and SwitchView are registered trademarks of Avocent Corporation. All other marks are the property of their respective owners.

© 2006 Avocent Corporation. All rights reserved. 590-656-501A

Instructions

This symbol is intended to alert the user to the presence of important operating and maintenance (servicing) instructions in the literature accompanying the appliance.

Dangerous Voltage

This symbol is intended to alert the user to the presence of uninsulated dangerous voltage within the product's enclosure that may be of sufficient magnitude to constitute a risk of electric shock to persons.

Power On

This symbol indicates the principal on/off switch is in the on position.

Power Off

This symbol indicates the principal on/off switch is in the off position.

Protective Grounding Terminal

This symbol indicates a terminal which must be connected to earth ground prior to making any other connections to the equipment.

TABLE OF CONTENTS

Chapter 1: Installation 1

Introduction 1

Getting Started 1

Installation 2

Rack Mounting Your SwitchView 1000 Switch 3

Accessing and using the OSD menus 4

Upgrading firmware 6

Daisy-chaining your SwitchView 1000 switch 7

Appendices 9

Appendix A: Quick Reference Guide 9

CHAPTER

1

Installation

Introduction

The SwitchView® 1000 switch is a 4, 8 or 16-port keyboard, video and mouse (KVM) appliance that supports both USB and PS/2 interfaces. With the capacity to daisy-chain up to 16 levels, the SwitchView 1000 switch also allows direct channel selection via three different methods: on-screen display (OSD), front-panel push-buttons or keyboard hotkeys.

Time-out and password protection offer secure access to the SwitchView 1000 switch, while the hot-plug feature allows for uninterrupted switching and usage.

Figure 1.1: SwitchView 1000 Switch

Getting Started

Before installing your SwitchView 1000 switch, refer to the following list to ensure you have all items that shipped with the appliance, as well as other items necessary for proper installation.

Supplied with the SwitchView 1000 switch

- SwitchView 1000 switch
- Rack mount kit
- Power supply
- Daisy-chain cable

- Upgrade cable
- Ground terminator

Installation

If you are installing your SwitchView 1000 switch to a PS/2 interface, you must power down all servers before connecting your switch to a server to ensure proper installation. USB interfaces do not need to be powered down before installation.

NOTE: Linux users may experience mouse failure if hot-plugging directly to the SwitchView 1000 switch. If your mouse becomes locked, use the mouse reset hotkeys (see *Appendix A*) to reset your mouse, or turn the Linux server off before connecting it to the SwitchView 1000 switch.

Plug one end of the supplied power cord into the back of the switch and the other end into an appropriate power source. Connect the local keyboard, monitor and mouse cables to the appropriate ports on the rear of your SwitchView 1000 switch.

Connect your servers to an available port on the rear of your SwitchView 1000 switch using the cable appropriate for your interface. Power up all connected servers. Keyboard and mouse recognition is now activated and your SwitchView 1000 switch is ready for operation. Figure 1.2 on page 3 shows a basic configuration for the SwitchView 1000 switch.

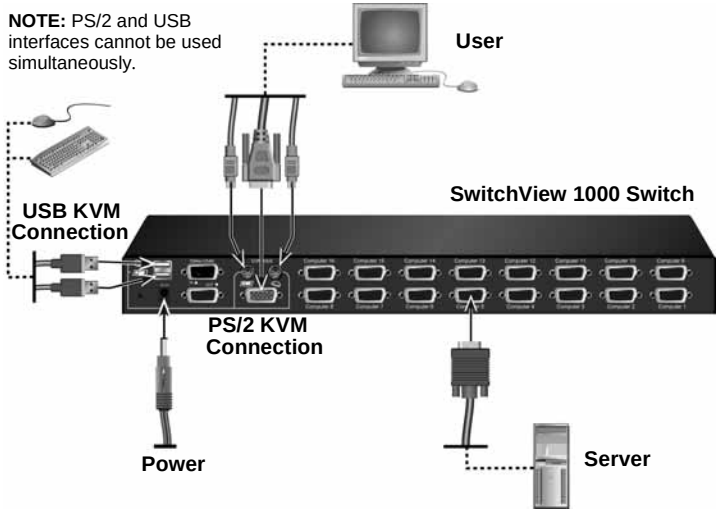

Figure 1.2: Basic SwitchView 1000 Switch Configuration

CAUTION: To reduce the risk of electric shock or damage to your equipment:
- Plug the power cord into a grounded (earthed) outlet that is easily accessible at all times.
- Disconnect the power from the unit by unplugging the power cord from either the electrical outlet or the unit.

Rack Mounting Your SwitchView 1000 Switch

Your SwitchView 1000 switch may be rack mounted using brackets. Before installing the appliance, stabilize the rack in a permanent location. Install your equipment starting at the bottom of the rack, then work to the top.

CAUTION: Rack Loading - Overloading or uneven loading of racks may result in shelf or rack failure, causing damage to equipment and possible personal injury. Stabilize racks in a permanent location before loading begins. Mount components beginning at the bottom of the rack, then work to the top. Do not exceed your rack load rating.

Accessing and using the OSD menus

The OSD menus allow you to easily access and edit such features as server name, setup functions, time-outs, autoscan capabilities and firmware upgrades. The following table lists basic OSD functions.

Table 1.1: Navigating the OSD menu

To do this:	Use this hotkey sequence:
Activate OSD	**ScrLk + ScrLk + Spacebar**
Deactivate OSD	**ESC** *(Escape key)*
Change Value	Left/right arrow keys
Select Item	Up/down arrow keys

NOTE: The two consecutive **ScrLk** keystrokes should be pressed within two seconds and the following command key(s) should also be pressed within two seconds. Otherwise, the hotkey sequence will not be validated.

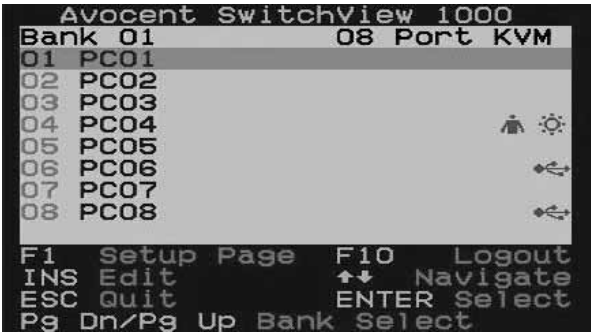

Figure 1.3: Main OSD Window (8-port SwitchView 1000 Switch)

The following options will be selectable via the Main OSD window.

Table 1.2: Main OSD Menu Functions

Function	Description
Select server	Use up/down arrow key to navigate and press **PgUp/PgDn** to scroll page. Press **Enter** to select.
Edit server name	Pressing **Insert** allows you to change a server name. **Enter** confirms the change.

Table 1.2: Main OSD Menu Functions (Continued)

Function	Description
Setup	A submenu for various configurations.
Logout	Logs out keyboard and mouse for security.

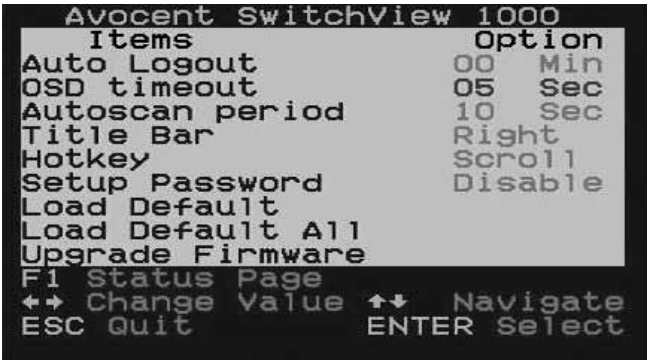

Figure 1.4: Setup Options Window

The following options will be selectable via the Setup OSD window.

Table 1.3: Setup menu functions

Function	Description
Auto logout	Specifies time for auto logout (0 to 99 min). Your password must be configured and enabled for auto logout to function.
OSD timeout	Specifies duration for OSD menu to remain on screen.
Autoscan period	Specifies time for the autoscan period.
Title bar	Specifies the position of the OSD title bar.
Hotkey	Specifies the hotkey initiation sequence: **ScrLk** (default), **Caps Lock**, **ESC**, **F12** or **Num Lock.**
Setup Password	Enter user-selectable password.
Load Default	Loads the default settings.
Upgrade Firmware	Upgrades the firmware of the switch.

Upgrading firmware

The SwitchView 1000 switch firmware is upgradable via the firmware upgrade cable (included). Maintaining current firmware enhances the SwitchView 1000 switch's compatibility with other devices and can enhance the switch's performance. Go to www.avocent.com/support for more information on upgrading your firmware.

To upgrade your SwitchView 1000 switch:

Prior to beginning the firmware upgrade process, ensure that you have an RS-232 port (COM port), and a mouse and a keyboard directly connected to it. You will also need the upgrade cable, upgrade utility and upgrade file.

1. Power up the SwitchView 1000 switch.

NOTE: The firmware upgrade process automatically upgrades all SwitchView 1000 switches daisy-chained to your primary switch.

2. Invoke the OSD menu and press **F1** to enter the Setup Page. Navigate to Upgrade Firmware and press **Enter**.
3. Select *Yes* and press **Enter** to enable upgrade mode.
4. Use the firmware upgrade cable to connect the RS-232 port (COM port) of the host server to the Daisy Chain In port of the (primary) SwitchView 1000 switch.
5. Double-click on the SV1000 upgrade utility icon to bring up the following window.

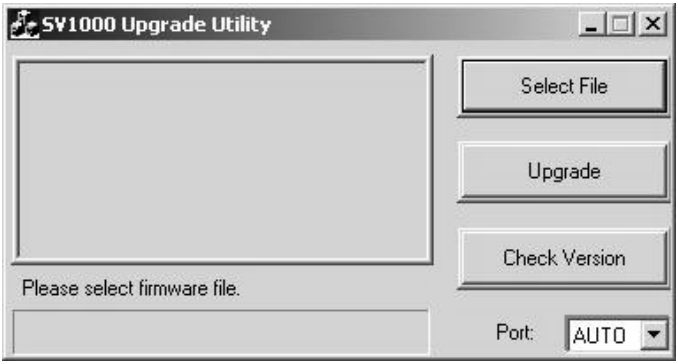

Figure 1.5: Main Upgrade Utility Window

6. Click *Select File* to locate the firmware upgrade file.

7. Click *Check Version* to see the current firmware version of your SwitchView 1000 switch. If the selected firmware file is a newer version, click *Upgrade* to start the upgrade process.

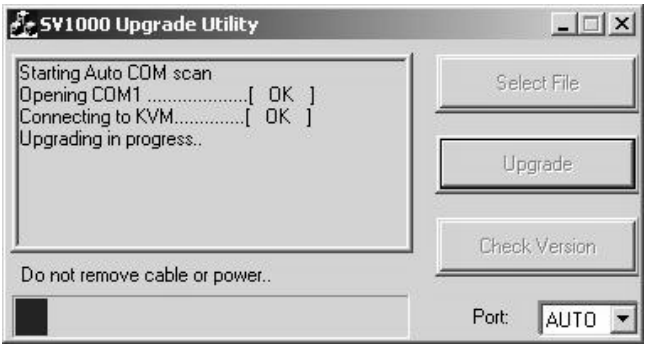

Figure 1.6: Starting Upgrade Process Window

NOTE: During the upgrade process, do not remove the upgrade cable or SwitchView 1000 switch power adaptor.

8. An *Upgrade complete!* message appears above the progress bar after a successful firmware upgrade. You may now exit the utility.

Daisy-chaining your SwitchView 1000 switch

The SwitchView 1000 switch features up to 16 levels of attached switches via the daisy-chain cable. The 16-port switch is daisy-chainable up to 256 servers, while the 8-port switch has a 128 server limit. The 4-port switch can be daisy-chained with up to 64 servers. Contact Avocent to purchase additional cables.

NOTE: All SwitchView 1000 switch models (4-port, 8-port and 16-port) can be daisy-chained up to 16 levels. For example, a 16-port and 8-port SwitchView 1000 switch can be daisy-chained to connect a maximum of 24 servers.

To cascade multiple switches:

1. Plug one end of the daisy-chain cable into the Daisy Chain Out port on the rear of your primary SwitchView 1000 switch.
2. Connect the other end of the daisy-chain cable to the Daisy Chain In port on the secondary SwitchView 1000 switch.
3. Repeat steps 1 and 2 for all subsequent SwitchView 1000 switches.

4. Plug the ground terminator into the Daisy Chain Out port on the rear of the last daisy-chained SwitchView 1000 switch.

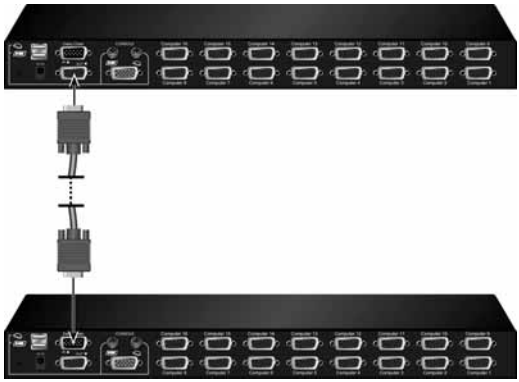

Figure 1.7: Basic Daisy-Chain Example

APPENDICES

Appendix A: Quick Reference Guide

Table A.1: SwitchView1000 Quick Reference Guide

Command	Hotkeys	OSD Control	Front-panel	Description
Select Server	**ScrLk + ScrLk +** (a) + (b) + (y) + (z) ab = bank no. xy = channel no.)	Cursor keys to navigate **Enter** to select	Press corresponding button yz on Switch ab for channel yz on bank ab	Select the active bank (switch) and channel
Next Lower Channel	**ScrLk** + **ScrLk** + (arrow up)	Cursor keys to navigate **Enter** to select	Press corresponding button	Select the next lower connected channel
Next Higher Channel	**ScrLk** + **ScrLk** + (arrow down)	**Enter** to select	Press corresponding button	Select the next higher connected channel
Next Lower Bank	**ScrLk** + **ScrLk** + **PgUp**	**PgUp** (w/ OSD Menu)	Press corresponding button	Select the next lower bank (switch) with multiple daisy-chained units
Next Higher Bank	**ScrLk** + **ScrLk** + **PgDn**	**PgDn** (w/ OSD Menu)	Press corresponding button	Select the next higher bank (switch) with multiple daisy-chained units
Autoscan Beep Sound On/Off	**ScrLk**+**ScrLk** + **B**	N/A	N/A	Toggle on/off the beep sound for switching confirmation while autoscanning. The beep sound can be turned off during normal switching
Load Factory Default	N/A	Main Menu / Setup / Load Default	N/A	Restore the EEPROM settings to the factory default
Change Server Name	N/A	**Enter** (**Ins**) to select/edit	N/A	Change the server name [max. length = 8 alphanumeric characters]
Reset / Initialize	**ScrLk** + **ScrLk** + **End**	N/A	N/A	Reset the switch/initialize the daisy-chain setup

Table A.1: SwitchView1000 Quick Reference Guide (Continued)

Command	Hotkeys	OSD Control	Front-panel	Description
Show OSD Menu	**ScrLk + ScrLk +** (Space Bar)	N/A	N/A	Activate the OSD Menu on the console screen
Autoscan	**ScrLk** + **ScrLk** + **S**	N/A	N/A	Autoscan through every connected channel for quick screen browsing of each channel
Stop Autoscan	Any key	N/A	Press any push-button	Terminate Autoscan activity
Autoscan Period [5 ~ 95 seconds]	N/A	Main Menu / Setup / Autoscan period	N/A	Specify delay time within a range of 5 ~ 99 seconds [default = 10 sec]
Auto Logout Timeout Enable/ Disable 0~ 99 min	N/A	Main Menu / Setup / Auto Logout	N/A	Specify the time out for auto logout screen /keyboard/ mouse locked after timeout period for security (default = 0 = Disable)
OSD Menu Timeout 0 ~ 60 ~ 95 seconds	N/A	Main Menu / Setup / OSD Timeout	N/A	Specify the timeout for OSD menu [default = 60 seconds; 0 = disable]
OSD Title Bar On/Off	**ScrLk** + **ScrLk** + **T**	N/A	N/A	Enable/disable the OSD Title Bar [default = ON]
OSD Title Bar Position		Main Menu / Setup / Title Bar		Select the OSD title bar position on your screen
Setup Password [Disable/ Enable]	N/A	Main Menu / Setup / Setup Password	N/A	Enable/disable password protection [default = Disable; password length <= 8 characters]

Avocent®

The Power of Being There®

For Technical Support:
www.avocent.com/support

Avocent Corporation
4991 Corporate Drive
Huntsville, AL 35805-6201 USA
Tel: +1 256 430 4000
Fax: +1 256 430 4031

Avocent Asia Pacific
Singapore Branch Office
100 Tras Street, #15-01
Amara Corporate Tower
Singapore 079027
Tel: +656 227 3773
Fax: +656 223 9155

Avocent Canada
20 Mural Street, Unit 5
Richmond Hill, Ontario
L4B 1K3 Canada
Tel: +1 877 992 9239
Fax: +1 877 524 2985

Avocent International Ltd.
Avocent House, Shannon Free Zone
Shannon, County Clare, Ireland
Tel: +353 61 715 292
Fax: +353 61 471 871

Avocent Germany
Gottlieb-Daimler-Straße 2-4
D-33803 Steinhagen
Germany
Tel: +49 5204 9134 0
Fax: +49 5204 9134 99

590-656-501A