0JWT.303.852

ME1904

技术要求：

1、CW(出轴端看)。
2、每相20匝。
3、电机前轴承型号采用NTN6006 LLUC3/5K(日本原装)。
4、传感器采用RLS(www.rls.si)公司正余弦编码器，正余弦编码器型号：RMB29AC01SS1，磁头型号：RMH06A3A02
5、电机用聚苯乙烯泡沫和普通白盒包装，每台电机上应刻上铭牌。
6、包装盒上需注：Part Number:ME1904
Made in China
7、使用150℃的磁钢
8、正余弦传感器调节：反电势和示波器探针接电机M1，接地探针接M2，使反电势波形超前传感器的正弦波上升波零位20度电角度，如果使用SEVCON控制器，编码器位置必须在±3度之内。
9、电机相电阻:0.006Ω
10、电机线线电感：0.082mH
11、传感器磁头平面至传感器线路板安装面的距离为2.5mm 3mm,传感器发出的电压幅值的峰峰值为1.8V 2.6V
12、绝缘等级：H级
13、编码器引出线套热缩套管处(装编码器的壳腔里面)加尼龙扎扣扎紧
14、编码器安装到近接盘时割若磁头那一面需先用KDW 3582双组分硅橡胶涂封，涂封高度不允许超过芯片表面，

规格表

额定转速(RPM)	额定电流 (A)	额定电压 (V.DC)	功率 (W)
5000	200	96	17300

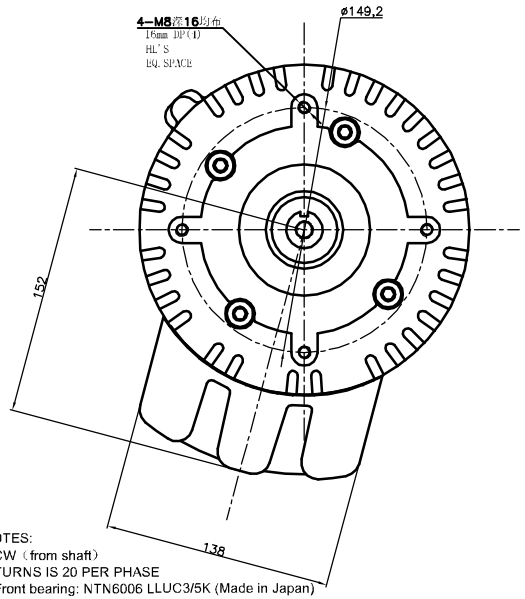

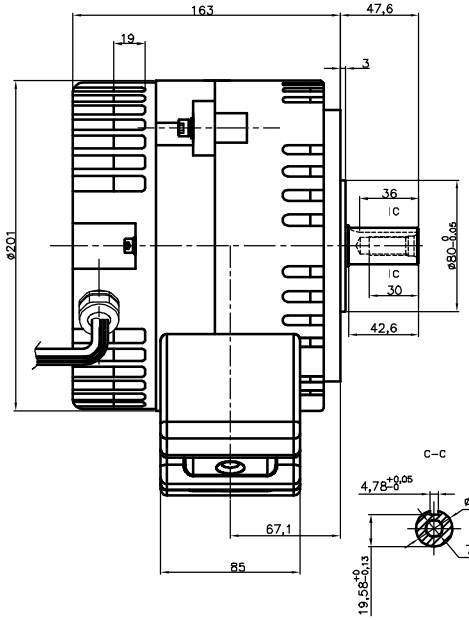

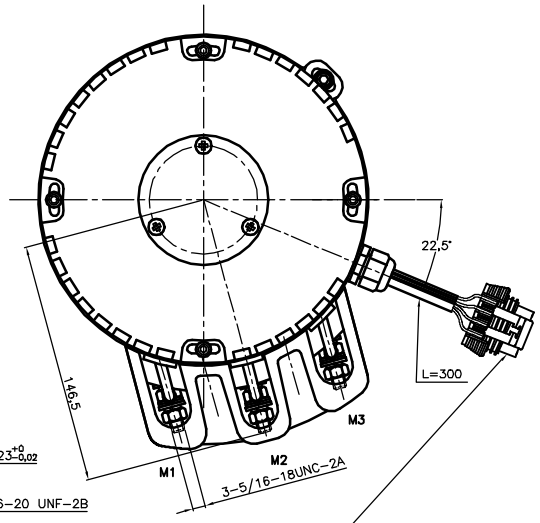

8 pin Metri-pack 150 series:
Connector:12047937
Terminal Position Assurance:15324525
Terminal:12084200
Cable Seal:15324973
Seal:12059168-B

1.sine/cosine encoder

PIN LOCATION 插孔点	WIRE DESIGNATION 导线标记	WIRE COLOR 导线颜色
A	Sine(正弦)	BLUE蓝
B	Cosine(余弦)	WHITE白
C	Ground (0)	BLACK黑
D	N.C	
E	V_{DD} (+5V)	RED红
F	Shield(保护)	GREEN绿
G	Temp1	WHITE(-)白
H	Temp2	WHITE(+)白

NOTES:
1.CW (from shaft)
2.TURNS IS 20 PER PHASE
3.Front bearing: NTN6006 LLUC3/5K (Made in Japan)
4.USE RLS(www.rls.si) ENCODER
sine/cosine encoder:RMB29AC01SS1
magnetic actuator:RMH06A3A02
5.Product to be shipped in plain white box, styrofoam packaging
Include Dyno Plot in box.
6.Box to be marked: Part Number: ME1904
Made in China
7.Magnets:150℃
8.Sensor Timing:with BEMF oscilloscope probe attached to M1 and ground probe attached to M2,the BEMF rising edge zero cross should lead the sine wave(sensor pin A to sensor pin C gnd)zero cross by 20 electrical degrees of the BEMF waveform.Alternatively if timing the sensor using a Sevcon controller,the encoder position should be within +/-3 degrees of 0.
9.Motor Phase Resistance is 0.006Ω
10.Motor inductance at 100Hz is 0.082mH
11.Sensor magnet is to be 2.5mm to 3mm from the sensor mounting face. The minimum amplitude for the sensor is 2 volts AC,peak to peak.
12.Class H insulation system.
13.Zip tie to be installed on sensor wire inside sensor cavity providing strain releif and to prevent heat shrink from off exposing sheield wires
14.Silicone glue KDW-3582 is to be applied surrounding the sensor chip filling the space in the disk up to the surface of the chip on the sensor ensuring all chip connections are completely submerged.

NAMECARD DATA
PART # ME1904
DATE CODE XXXXXX
SERIAL #:XX.XX.XXXX
Motenergy,Inc.

标记	处数	更改文件号	签 字	日 期
设 计	滕露露	标准化	陈香	
校 对	李小平	审 定	王俊	
审 核	李国森			
工 艺		日 期	19.10.23	

图样标记	数量	重量	比例
M S A			
共 页		第 页	

金坛微特电机有限公司
JINTAN MICRO&SPECIAL MOTOR CO.,LTD.

外形图

0JWT.303.852

旧底图总号

底图总号

日 期 | 签字