WALKER FILTRATION

The ultimate filtration & drying technology

WFH Series

High Efficiency Filters

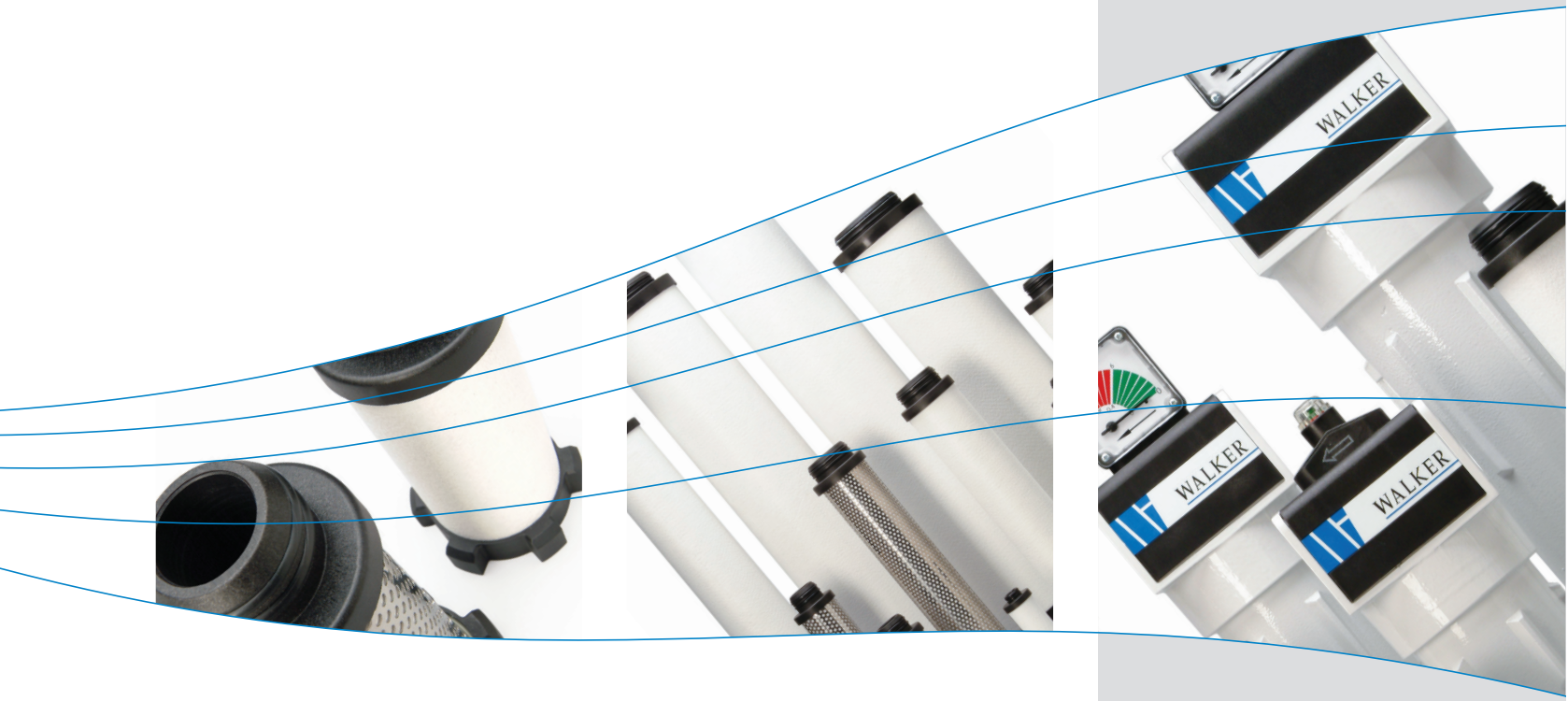

www.walkerfiltration.com

Save Energy Dollars
Protect Your Air System…

Your compressed air is contaminated! Airborne water vapor and dust are drawn into your compressor intake. The compressor adds oil aerosols, vapors and wear metals. Piping can add rust and scale.

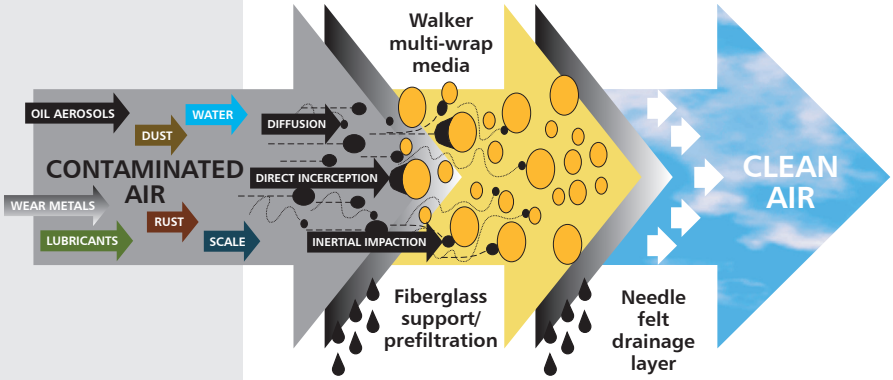

The Compressed Air Challenge™, a government / industry sponsored energy savings awareness program, estimates that $1.5 billion dollars a year is spent in the US to compress air. Over 20% of this could be saved by better design and management of compressed air systems. Excessive filter pressure drop is a key target to achieve this goal.

Walker WFH High Efficiency Filters can save energy dollars because they have a lower pressure drop throughout the Filter Element life, when compared to competitive filters using older element technology.

Don't be fooled by calculated savings from competitive de-mister filter modules. They do not have the efficiency of the Walker Element, so tiny particulates flow downstream to pneumatic equipment, causing the wear and damage that a filter should prevent.

Real Dollars Example

With a 200 HP Air Compressor running 24 hours per day, at 93% motor efficiency, and an electrical cost of $0.10/ kW-HR, the 3 psid lower average pressure drop of a WFH Filter would represent an annual saving of over $3,000! A system that has three filters can save up to $9,000 per year.

Typical pressure drop curves for 0.01 micron compressed air filters

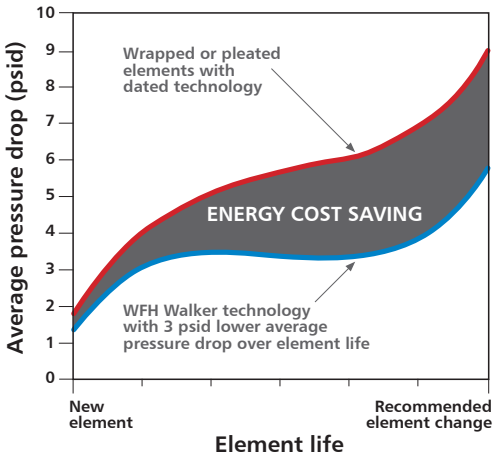

tel +1 814 836 2900 **fax** +1 814 836 7921
email usa@walkerfiltration.com **web** www.walkerfiltration.com

Introducing Our High Technology Filter Elements

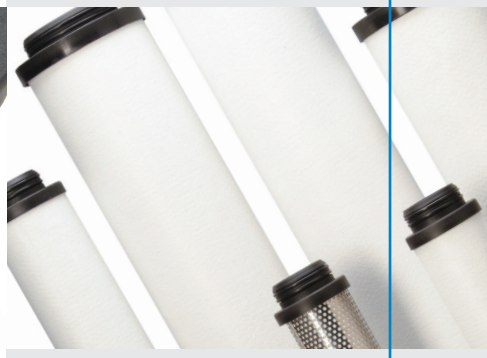

Unique Push-Fit, Double O-Ring Seal filter-to-head chamfered connection for ease of installation and removal.

Stainless Steel Support prevents corrosion.

Fiberglass Support provides prefiltration, reduces pressure drop and extends service life.

Deep Bed Multi-Wrap Borosilicate Glass Microfiber prevents high pressure drop and allows for a high dirt holding capacity. Wrap tension prevents channeled air flow.

Fiberglass Support provides additional strength to the deep bed.

Polyester Needle Felt Sleeve unique coalescing action to quickly drain oil. Will not crush like competitive foam socks. Ultrasonically welded down length. Will not decay with age.

Competitive foam socks are subject to attack by synthetic lubricants, corrosives, heat and are prone to decay.

End Cap is a durable and non-corrosive glass filled nylon which is attached to the element with a multipart urethane resin.

The element is then held in place by internal ribs within the filter housing.

Suitable for temperatures up to 248°F. Compatible with synthetic and mineral lubricants. Low average pressure drop over life of element. Regular replacement suggested for best performance and energy cost savings.

Our filter elements are also suitable for use in oil-free compressed air applications.

Low operating cost
Regular filter element replacement saves money. It minimizes pressure drop and ensures protection of your compressed air system, pneumatic equipment and finished product. We offer an extended ten year warranty on filter housings.

Ultimate Filtration Technology

The WFH Series offers enhanced filter housing and filter element performance and reliability. Providing a compressed air filtration solution to virtually all industrial environments.

Duplex Filter
Unique 20 and 30 scfm filter uses 0.01 micron element on bottom and vapor element on top, built with the features of our larger design.

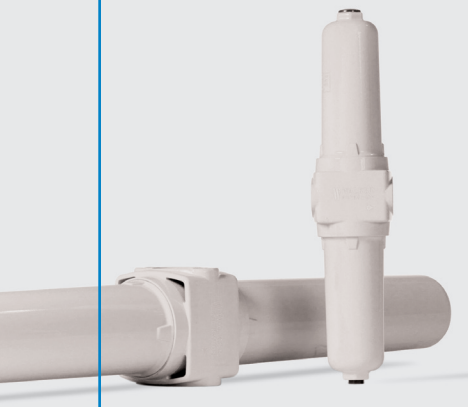

Side Port (65-16100 scfm) Side mounting of external auto drain for low clearance applications.

Can be used as a separate manual drain or as a vent line connection to an external demand drain mounted to bottom connection.

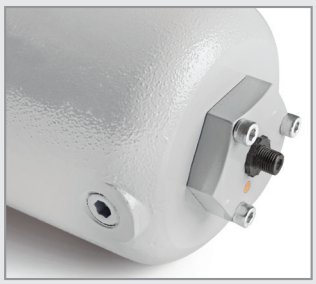

Bottom Drain Adapter Plate (1000-1500 scfm)

Removable drain adapter for ease of float drain maintenance.

Easy disconnect of external drain when element is changed.

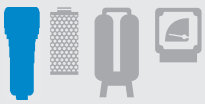

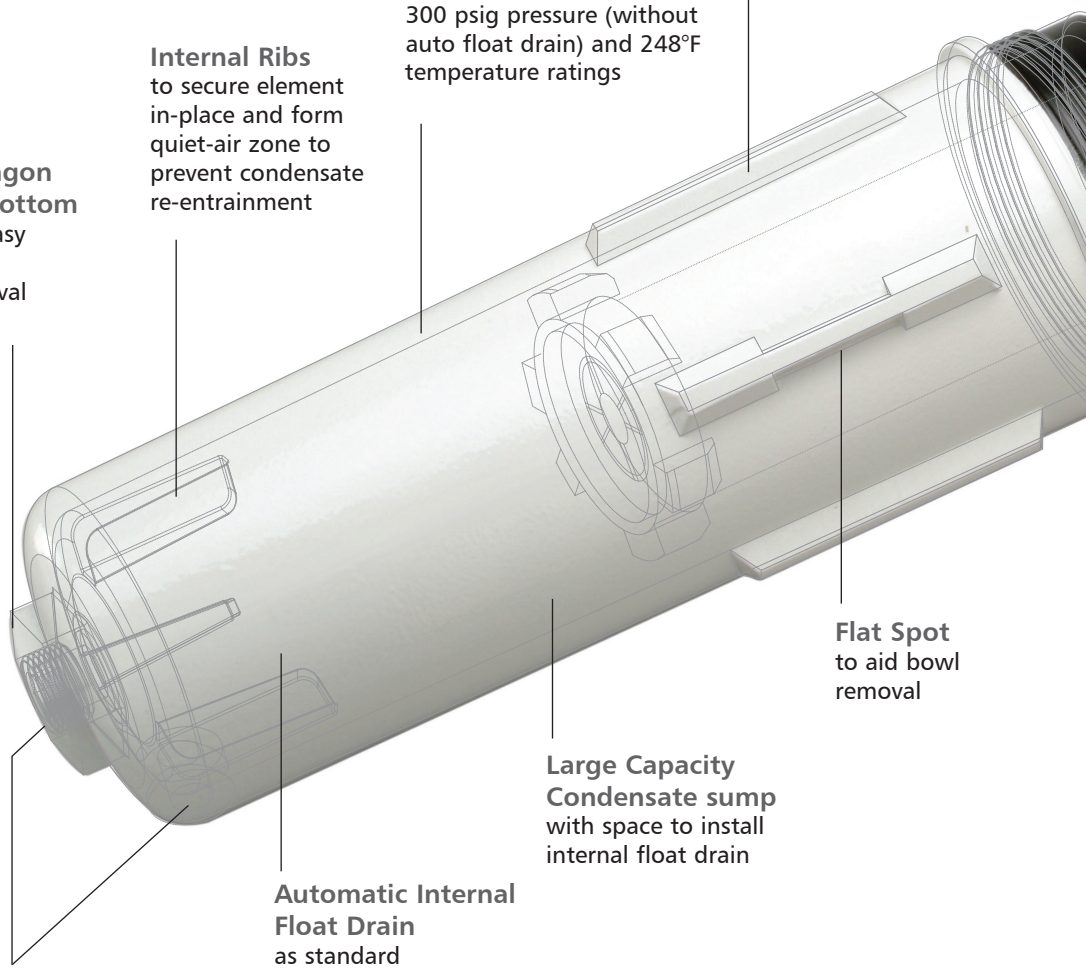

tel +1 814 836 2900 **fax** +1 814 836 7921
email usa@walkerfiltration.com **web** www.walkerfiltration.com

Features and Benefits

Captive Piston Type O-Ring Annular Seal
between head and bowl to prevent leaks

ACME threads
offer ease of service/bowl removal

Modular NPT Connections
option to bolt up to three filters together with High Nitrile O-ring connection to save space, offer ease with installation and eliminate leaks

Only 4 - 7" clearance required for element removal

Delta-P Gauge (standard)
Two-sided DP gauge face is not pressurized. Unique magnetic sensor ensures reliability.

Pop-up DP Indicators (optional)
Nylon pop-up is available as a lower cost option.

Remote Contact DP Alarm (optional)
Dry contacts close at 6 psid to send a notification signal to a bell, light, or control panel. Can be field installed.

Accessories

MB - Mounting Brackets
Allows convenient wall mounting of single or multiple filters.

RS - Ring Spanner
Easy bowl removal.

PP - Port Plates
Allows for easy change from standard port size to match larger pipe size and reduce pipe fittings. Prevents costly oversizing of filters to pipe size.

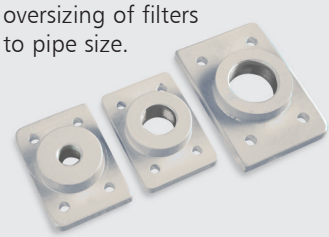

MDV - Manual Drain Valves
Available for all models.

CK - Connecting Kits
Available for models 20-1500 scfm.

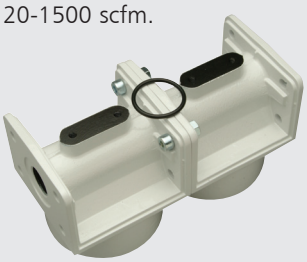

Technical Specification

Available Filter Grades

- **G** General purpose, coalescing and bulk contaminant removal; point-of-use
- **P** Pre-filtration to refrigerated dryer; higher efficiency, coalescing point-of-use (heatless desiccant dryer after filter)
- **C** High efficiency coalescing oil removal after refrigerated dryer; upstream of desiccant dryers
- **V** Combination particulate/vapor removal

Typical Compressed Air Treatment Systems

1

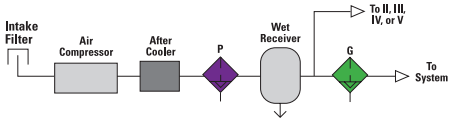

2

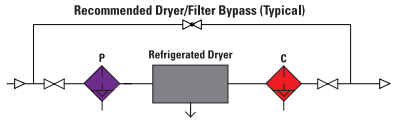

3

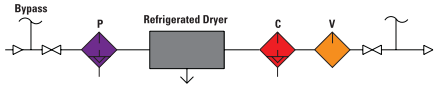

4

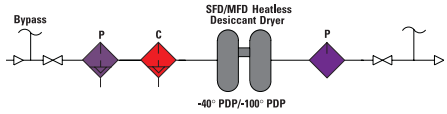

5

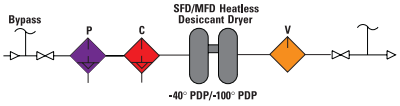

Compressed air purity classes ISO 8573-1

The ISO 8573 group of International Standards is used for the classification of compressed air. It also provides the test methods and analytical techniques for each type of contaminant. The table below summarizes the maximum contaminant levels specified in ISO 8573 Part 1 (2010) for the various compressed air quality classes. Each compressed air classification can be achieved by installing a specific filter grade or a combination of filter grades, depending upon required performance.

	Particles				Water		Oil
	Maximum number of particles per cubic metre as a function of particle size, d [a]				Vapor	Liquid [a]	Total Oil [a]
Purity Class	0.1μm < d ≤ 0.5μm	0.5μm < d ≤ 1.0μm	1.0μm < d ≤ 5.0μm	Mass Concentration Cp mg/m³	Pressure Dewpoint °C	Concentration Liquid Water Cw g/m³	Liquid, aerosol, vapor mg/m³
0	As specified by the equipment user or supplier and more stringent than Class 1						
1	≤ 20 000	≤ 400	≤ 10	-	≤-70	-	≤ 0.01
2	≤ 400 000	≤ 6 000	≤ 100	-	≤-40	-	≤ 0.1
3	-	≤ 90 000	≤ 1 000	-	≤-20	-	≤ 1
4	-	-	≤ 10 000	-	≤ +3	-	≤ 5
5	-	-	≤ 100 000	-	≤ +7	-	-
6	-	-	-	0 < Cp ≤ 5	≤ +10	-	-
7	-	-	-	5 < Cp ≤ 10	-	Cw ≤ 0.5	-
8	-	-	-	-	-	0.5 < Cw ≤ 5	-
9	-	-	-	-	-	5 < Cw ≤ 10	-
X	-	-	-	Cp > 10	-	Cw > 10	>5

Note: Activated charcoal filters must not operate in oil saturated conditions and will not remove certain types of gases including carbon monoxide and carbon dioxide. Change interval depends on application. Please contact your distributor.

Correction Factors

For maximum flow rate, multiply model flow rate shown in the speciation chart by the correction factor corresponding to the working pressure. See specifications for maximum pressure. **Note: To reduce pressure drop by 50%, reduce flow rate by 30%.**

Operating Pressure (psig)	10	20	30	40	50	60	70	80	90	100	110	125	150	175	200	225	250	275	300
Correction Factor	0.32	0.45	.055	0.64	0.71	0.78	0.84	0.90	0.95	1.00	1.05	1.12	1.22	1.32	1.41	1.49	1.58	1.65	1.73

	Coalescing Filters			Vapor Filter	Duplex
Grade	G	P	C	V	D
Particle removal	5.0 micron	1.0 micron	0.01 micron	0.01 micron	0.01 micron
Maximum carryover at 68°F / 20°C	5 ppm	0.1 ppm	0.01 ppm	0.003 ppm	0.003 ppm
Recommended temperature	100°F / 38°C	100°F / 38°C	100°F / 38°C	77°F / 25°C	77°F / 25°C
Maximum temperature	248°F / 121°C	248°F / 121°C	248°F / 121°C	122°F / 50°C	248°F / 121°C
Pressure drop (clean and dry)	0.4 psid / 30 mbar	1.0 psid / 70 mbar	1.5 psid / 100 mbar	1.0 psid / 70 mbar	2 psid / 140 mbar
Pressure drop (saturated)	1.0 psid / 70 mbar	2 psid / 140 mbar	3.0 psid / 210 mbar	N/A	3.0 psid / 210 mbar
Pressure drop (change element)	6.0 psid / 400 mbar	6.0 psid / 400 mbar	6.0 psid / 400 mbar	see note	see note
Element media	Borosilicate Glass Microfiber			Carbon impregnated paper	Combined C & V grades
Maximum working pressure	232 psig / 16 barg (300 psig / 20 barg without auto float drain)				
Housing material	High quality aluminum				

tel +1 814 836 2900 **fax** +1 814 836 7921
email usa@walkerfiltration.com **web** www.walkerfiltration.com

Technical Specification

Filter model	Flow rate scfm	Flow rate Nm³/h	Dimensions inches (mm) A	B	C	D	E	NPT connections In/Out	Side	Bottom**	Weight lbs	Replacement element model
WFH20[*]	20	34	2.83 (72)	1.38 (35)	7.32 (186)	2.95 (75)	N/A	1/4″	N/A	1/4″	1.4	WFH20[*]E
WFH20[D***]	20	34	2.83 (72)	5.94 (151)	5.94 (151)	2.95 (75)	N/A	1/4″	N/A	1/4″	1.9	WFH20[D***]E
WFH30[*]	30	51	2.83 (72)	1.38 (35)	7.32 (186)	2.95 (75)	N/A	3/8″	N/A	1/4″	1.4	WFH30[*]E
WFH30[D***]	30	51	2.83 (72)	5.94 (151)	5.94 (151)	2.95 (75)	N/A	3/8″	N/A	1/4″	1.9	WFH30[D***]E
WFH65[*]	65	110	4.33 (110)	1.50 (38)	10.75 (273)	5.98 (152)	1.30 (33)	1/2″	1/4″	1/4″	5.4	WFH65[*]E
WFH75[*]	75	128	4.33 (110)	1.50 (38)	10.75 (273)	5.98 (152)	1.30 (33)	3/4″	1/4″	1/4″	5.4	WFH75[*]E
WFH100[*]	100	170	4.33 (110)	1.50 (38)	14.09 (358)	5.98 (152)	1.30 (33)	1″	1/4″	1/4″	6.1	WFH100[*]E
WFH150[*]	150	255	4.33 (110)	1.50 (38)	14.09 (358)	5.98 (152)	1.30 (33)	1″	1/4″	1/4″	6.0	WFH150[*]E
WFH225[*]	225	382	5.75 (146)	2.01 (51)	19.06 (484)	6.50 (165)	1.65 (42)	1 1/2″	1/2″	1/4″	12.2	WFH225[*]E
WFH300[*]	300	510	5.75 (146)	2.01 (51)	19.06 (484)	6.50 (165)	1.65 (42)	1 1/2″	1/2″	1/4″	12.3	WFH300[*]E
WFH450[*]	450	765	5.75 (146)	2.01 (51)	19.06 (484)	6.50 (165)	1.65 (42)	2″	1/2″	1/4″	12.3	WFH450[*]E
WFH650[*]	650	1105	5.75 (146)	2.01 (51)	26.97 (685)	6.50 (165)	1.65 (42)	2″	1/2″	1/4″	14.8	WFH650[*]E
WFH1000[*]	1000	1700	9.06 (230)	2.68 (68)	28.43 (722)	7.01 (178)	1.65 (42)	3″	1/2″	1/4″	40.6	WFH1000[*]E
WFH1250[*]	1250	2125	9.06 (230)	2.68 (68)	33.23 (844)	7.01 (178)	1.65 (42)	3″	1/2″	1/4″	44.1	WFH1250[*]E
WFH1500[*]	1500	2550	9.06 (230)	2.68 (68)	39.06 (992)	7.01 (178)	1.65 (42)	3″	1/2″	1/4″	48.3	WFH1500[*]E

Notes

* Fill in element grade (G, P, C, V) to appropriate model number.
** With internal float drain removed.
***Includes 1 ea. of C & V grade element.
**** Recommended for use as heatless desiccant dryer particulate after filter

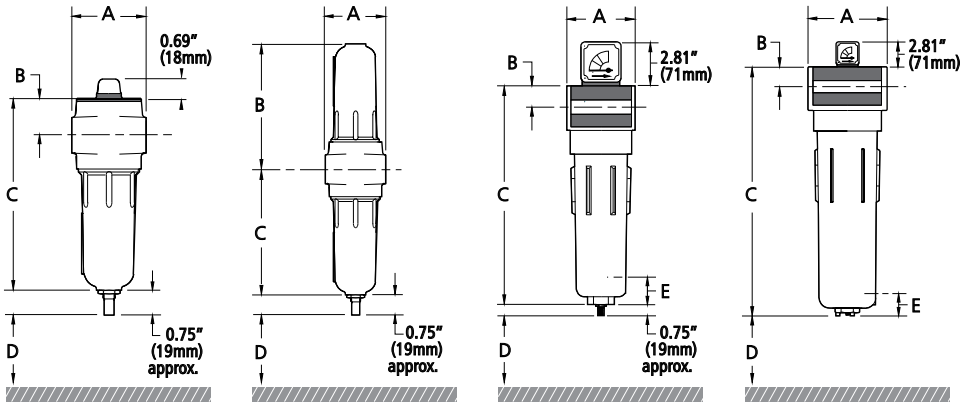

WFH20[*] WFH30[*] | WFH20[D***] to WFH30[D***] | WFH65[*] to WFH650[*] | WFH1000[*] to WFH1500[*]

Ordering information

WFH 65 G - P - MB

Flow
20
20D
30
30D
65
75
100
150
300
450
650
1000
1250
1500

Element grade(s)	
G	5.0 micron General purpose point of use
P	1.0 micron Coalescing/particulate ****
C	0.01 micron High efficiency coalescing
V	Activated carbon vapor removal
D	Duplex (size 20/30 only) ****

Options	
P	Pop-up indicator (Available on 65-1500 scfm models, G, P, & C grades only)
R	Differential pressure gauge with remote alarm (Available on 65-1500 scfm models, G, P, & C grades only)

Accessories	
MB	Mounting brackets: (Available for complete range)
PP	Port plates: (65-650 scfm, models only)
MDV	Manual drain valve: (Available for complete range)
RS	Ring spanner available for models 65-1500 scfm
CK	Connecting kits: (Available for complete range)

THE QUEEN'S AWARDS FOR ENTERPRISE: INTERNATIONAL TRADE 2012

WALKER FILTRATION

Walker Filtration Inc.
4748 Pacific Avenue,
Erie, PA 16506, USA
tel +1 814 836 2900
fax +1 814 836 7921
email usa@walkerfiltration.com
web www.walkerfiltration.com

Walker Filtration Ltd
Birtley Road, Washington,
Tyne & Wear, NE38 9DA, UK
tel +44 (0) 191 417 7816
fax +44 (0) 191 415 3748
email sales@walkerfiltration.co.uk
web www.walkerfiltration.com

Walker Filtration Pty Ltd
16-18 Lindon Court, Tullamarine,
Victoria 3043, Australia
tel +61 (0)3 9330 4144
fax +61 (0)3 9330 4177
email sales@walkerfiltration.com.au
web www.walkerfiltration.com.au

The ultimate filtration & drying technology

WFI_04 13

High Efficiency Compressed Air & Gas Filters, 20-1500 scfm

WFH Series High Efficiency Filters

filter model	pipe size NPT	flow rate** scfm	dimensions (inches) A	B	C	D	E	weight lbs	complete price ($)	element model	element price ($)
WFH20[*]	¼	20	2.83	1.38	7.32	2.95	N/A	1.4	219.00	WFH20[*]E	64.00
WFH20[D***]	¼	20	2.83	5.94	5.94	2.95	N/A	1.9	272.00	WFH20[D***]E	133.00
WFH30[*]	⅜	30	2.83	1.38	7.32	2.95	N/A	1.4	233.00	WFH30[*]E	76.00
WFH30[D***]	⅜	30	2.83	5.94	5.94	2.95	N/A	1.9	304.00	WFH30[D***]E	136.00
WFH65[*]	½	65	4.33	1.50	10.75	5.98	1.30	5.4	332.00	WFH65[*]E	115.00
WFH75[*]	¾	75	4.33	1.50	10.75	5.98	1.30	5.4	349.00	WFH75[*]E	121.00
WFH100[*]	1	100	4.33	1.50	14.09	5.98	1.30	6.1	438.00	WFH100[*]E	136.00
WFH150[*]	1	150	4.33	1.50	14.09	5.98	1.30	6.0	469.00	WFH150[*]E	158.00
WFH225[*]	1½	225	5.75	2.01	19.06	6.50	1.65	12.2	633.00	WFH225[*]E	180.00
WFH300[*]	1½	300	5.75	2.01	19.06	6.50	1.65	12.3	776.00	WFH300[*]E	208.00
WFH450[*]	2	450	5.75	2.01	19.06	6.50	1.65	12.3	966.00	WFH450[*]E	261.00
WFH650[*]	2	650	5.75	2.01	26.97	6.50	1.65	14.8	1151.00	WFH650[*]E	306.00
WFH1000[*]	3	1000	9.06	2.68	28.43	7.01	1.65	40.6	1568.00	WFH1000[*]E	386.00
WFH1250[*]	3	1250	9.06	2.68	33.23	7.01	1.65	44.1	1810.00	WFH1250[*]E	506.00
WFH1500[*]	3	1500	9.06	2.68	39.06	7.01	1.65	48.3	2270.00	WFH1500[*]E	565.00

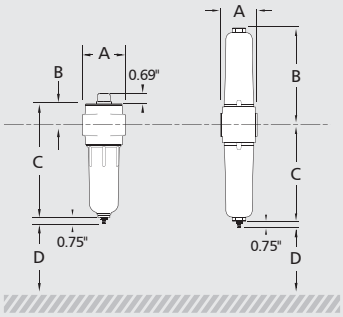

WFH20[*] to WFH30[*] | WFH20D[*] & WFH30D[*]

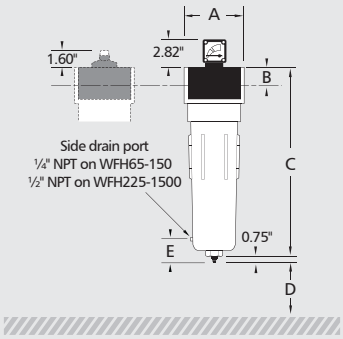

WFH65[*] to WFH1500[*]

The WFH Series High Efficiency Filters use 232 psig (300 psig without auto float drain) rated aluminum housings and have a variety of configurations to fill all compressor room applications. These filters are light weight and are designed for easy element replacement. They are available in (4) element grades: 5.0 micron Bulk Liquid/Particulate, 1.0 micron Coalescing/ Particulate, 0.01 micron High Efficiency Coalescing, and Charcoal/Vapor Removal. The WFH Series High Efficiency Filters include features and benefits unmatched by the competition.

configuration

Housing

20	20D	30	30D	65	75	100	150	225	300	450	650	1000	1250	1500

WFH 65 G - P - MB

Element grade(s)	
G	5.0 micron General purpose point of use
P	1.0 micron Coalescing/particulate ****
C	0.01 micron High efficiency coalescing
V	Activated charcoal vapor removal
D	Duplex (size 20/30 only) ****

Options	
P	Pop-up indicator (Available on 65-1500 scfm models, G, P, & C grades only)
R	Differential pressure gauge with remote alarm (Available on 65-1500 scfm models, G, P, & C grades only)

Accessories	
MB	Mounting brackets: (Available for complete range)
PP	Port plates: (65 - 650 scfm, models only)
MDV	Manual drain valve: (Available for complete range)
RS	Ring spanner available for models 65 - 1500 SCFM
CK	Connecting kits: (Available for complete range)

specification at standard flow

	Coalescing Filters			Vapor Filter	Duplex
Grade	G	P	C	V	D
Particle removal	5.0 micron	1.0 micron	0.01 micron	0.01 micron	0.01 micron
Maximum carryover at 68°F / 20°C	5 ppm	0.1 ppm	0.01 ppm	0.003 ppm	0.003 ppm
Recommended temperature	100°F / 38°C	100°F / 38°C	100°F / 38°C	77°F / 25°C	77°F / 25°C
Maximum temperature	248°F / 120°C	248°F / 120°C	248°F / 120°C	248°F / 120°C	248°F / 120°C
Pressure drop (clean and dry)	0.4 psid/ 30 mbar	1.0 psid / 70 mbar	1.5 psid / 100 mbar	1.0 psid / 70 mbar	2 psid / 140 mbar
Pressure drop (saturated)	1.0 psid / 70 mbar	2 psid / 140 mbar	3.0 psid / 210 mbar	N/A	3.0 psid / 210 mbar
Element media	Borosilicate Glass Microfiber			Carbon impregnated paper	Combined C & V
Maximum working pressure	300 psig / 20 barg (230 psig / 16 barg without auto float drain)				
Housing material	High quality aluminum				

tel +1 814 836 2900 **fax** +1 814 836 7921
e-mail USA@walkerfiltration.com **web** www.walkerfiltration.com

WFH Series Accessories

model	equipment description	to fit WFH model	complete price ($)
CK - connecting kits			
CONNECT-30	connecting kit for joining two filter housings together. Available for 20-1500 SCFM	WFH20, WFH30	21.00
CONNECT-150		WFH65, WFH75, WFH100, WFH150	26.00
CONNECT-650		WFH225, WFH300, WFH450, WFH650	31.00
CONNECT-1500		WFH1000, WFH1250, WFH1500	41.00
MB - mounting bracket kits (2 per kit)			
BRACKET-30	Allows convenient wall-mounting of single or multiple filters	WFH20, WFH30	41.00
BRACKET-150		WFH65, WFH75, WFH100, WFH150	46.00
BRACKET-650		WFH225, WFH300, WFH450, WFH650	51.00
BRACKET-1500		WFH1000, WFH1250, WFH1500	67.00
RS - ring spanner			
R-SPANNER-150	Allows convenient wall-mounting of single or multiple filters	WFH65, WFH75, WFH100, WFH150	51.00
R-SPANNER-650		WFH225, WFH300, WFH450, WFH650	62.00
R-SPANNER-1500		WFH1000, WFH1250, WFH1500	82.00
PP - port plates kits			
PORT-150-12	Allows for easy change from standard port size to match larger pipe size and reduce the number of required pipe fittings. Prevents costly oversizing of filters to pipe size	½" NPT outlet port for WFH65, WFH75, WFH100, WFH150	62.00
PORT-150-34		¾" NPT outlet port for WFH65, WFH75, WFH100, WFH150	62.00
PORT-150-10		1" NPT outlet port for WFH65, WFH75, WFH100, WFH150	72.00
PORT-150-112		1½" NPT outlet port for WFH65, WFH75, WFH100, WFH150	72.00
PORT-650-112		1½" NPT outlet port for WFH225, WFH300, WFH450, WFH650	82.00
PORT-650-20		2"NPT outlet port for WFH225, WFH300, WFH450, WFH650	82.00
other accessories			
DP-POP-UP	DP Pop-up Indicator, standard on models WFH20 & 30, optional on WFH65 thru WFH1500.		21.00
DP-GAUGE	DP Gauge, standard on models WFH65 - WFH1500.		103.00
DP-REMOTE	Remote Alarm Contact Assembly, for DP Gauge.		154.00
ADV16	Internal Float Drain Valve, standard on models 20-30. Will fit on all models.		31.00
ADVW16	Internal Float Drain Valve, standard on models 65-1500.		31.00
MDV	Manual Drain Valve		37.00

DP-REMOTE ADV16 MDV

technical notes

1. All prices are in U.S. dollars and do not include freight, which is an additional charge.
2. * - Fill in element grade (G, P, C or V), Example "WFH65PE".
3. ** - Flow rating is based upon 100 psig inlet air pressure, 100°F inlet air temperature.
4. [D]*** - Includes 1 each of C&V grade element, (C grade in bottom bowl and V grade in top bowl).
5. **** - Recommended for use as heatless desiccant dryer particulate after filter.
6. All accessories are sold separately. Connection hardware must be high alloy Grade 8 metric socket cap screws and is included.