GENUINE Mud Flaps, Front

INSTALLATION AND USER'S INSTRUCTIONS

Thank you for purchasing a genuine Mazda accessory.
Before removal and installation, be sure to thoroughly read these instructions.
Please read the contents of this booklet in order to properly install and use the mud flap.
Your safety depends on it.
Keep these instructions with your vehicle records for future reference.

⚠ WARNING

- There are several ⚠**WARNING** and ⚠**CAUTION** sections in this booklet concerning safety when installing or removing the mud flap. Always read and follow them in order to prevent injuries, accidents, and possible damage to the vehicle.
  ⚠ **WARNING:** Indicates a situation in which serious injury or death could result if the warning is ignored.
  ⚠ **CAUTION :** Indicates a situation in which bodily injury or damage to the vehicle could result if the caution is ignored.
- Do not modify the mud flap.
- Do not install the mud flap in any way other than described in the following instructions.
- If in any doubt, please ask your Mazda dealer to install the accessory in order to prevent errors in installation.
- If you have any questions about the use of the accessory, ask your Mazda dealer for proper advice before using it.
- Mazda and its suppliers are not responsible for injuries, accidents, and damage to persons and property that arise from the failure of the dealer or installer to follow these instructions.
- To ensure safety and reliability of the work, installation, removal and disposal work must carried out by an Authorized Mazda Dealership.
- Be careful not to lose removed parts, and be sure that they are kept free from scratches, grease or other dirt.

PART NAME: Mud Flaps, Front
PART NUMBER: GS3L V3 450
VEHICLE: MAZDA6

NOTE

To the dealer
- Please turn over these instructions to the customer after installation.

To the customer
- Keep these instructions after installation. The instructions may be necessary for installing other optional parts or removal of this accessory.
- Should the vehicle or this accessory be resold, always leave these instructions with it for the next owner.

KBGS3LV3450X00

1. PARTS

▼ Installation view

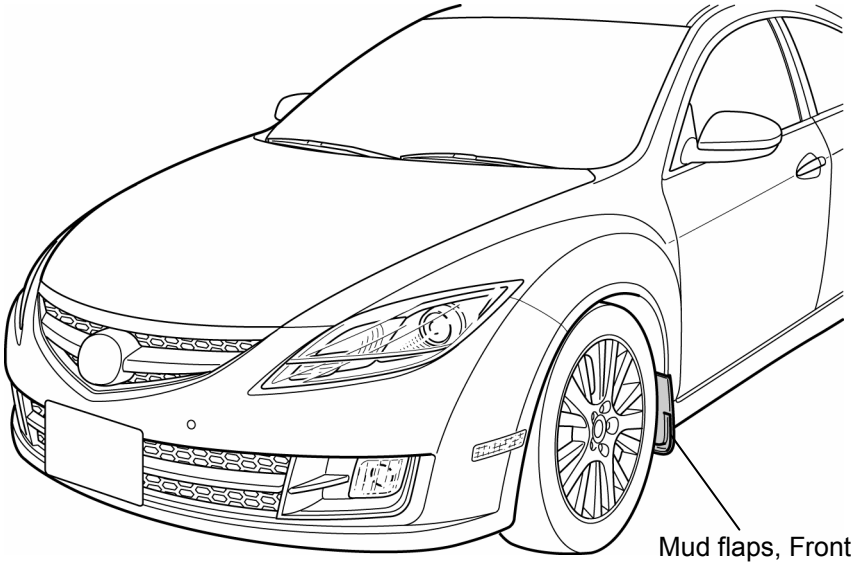

▼ Parts list

NOTE

- Before installation, verify that the kit includes all the following parts and that they are free of dirt, scratches, or damage.

Part	Part name	Part number	Qty
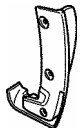	Mud flap, Front (RH)	————	1
	Mud flap, Front (LH)	————	1
	Fastener	N115 51 599	6
	Screw	9CN60 0516B	2
	Screw grommet	————	2
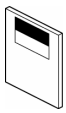	Installation and user's instructions	————	1

2. BEFORE INSTALLATION

■ REQUIRED TOOLS

☆Screwdriver (Phillips) ☆Torque wrench ☆Small flathead screwdriver wrapped with protective tape
☆Water-base pen marker ☆Drill (3 mm, 8 mm drill bits) ☆Punch ☆Round file ☆Jack
☆Protective sheet ☆Primer ☆Isopropyl alcohol (IPA)

⚠ WARNING

- Park the vehicle on a flat, level surface, set the selector lever to P (AT vehicles) or the shift lever to 1st or R (MT vehicles), apply the parking brake and block the wheels so that the vehicle does not move during installation.

⚠ CAUTION

Use the most appropriate (size, use) tool for each task and perform the may be damaged.	Place the removed parts and kit accessories on a protective sheet to prevent scratches.
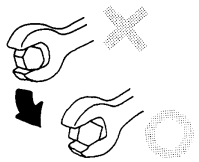	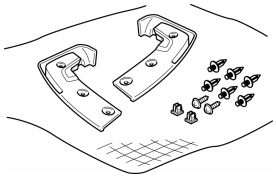

⚠ CAUTION

- Always use a torque wrench when tightening bolts and screws and tighten to the specified torque. If tightened outside the specified torque, it could result in poor fit, part damage, or other damage.
- The mud flaps, Front are made of hard plastic. Handle it with care, as it may be deformed or discolored if it contacts solvents such as paint thinner or comes close to flame.

NOTE

- Refer to the applicable Workshop Manual for removal and installation of vehicle parts. Not following the procedures for removal/installation in the Workshop Manual could result in an accident or vehicle malfunction.

3. INSTALLATION OF THE MUD FLAPS, FRONT

NOTE

- The figure shows the left side, however, perform the same procedure for the right side.

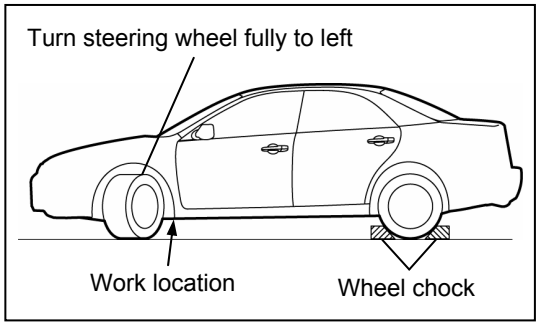

1. Turn the steering wheel fully to the left.

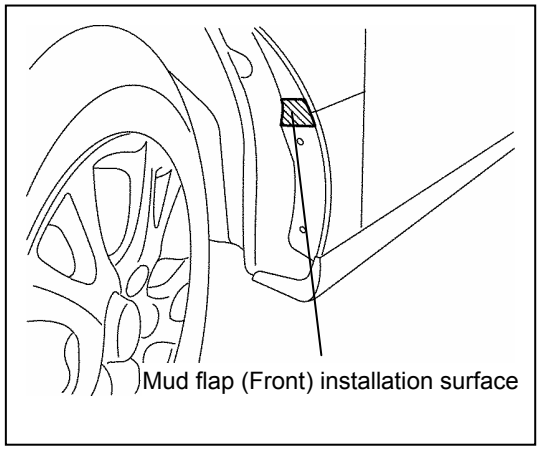

2. Use a soft cloth dampened with IPA (isopropyl alcohol) to clean the surface of the vehicle where the mud flap (front) is to be installed.

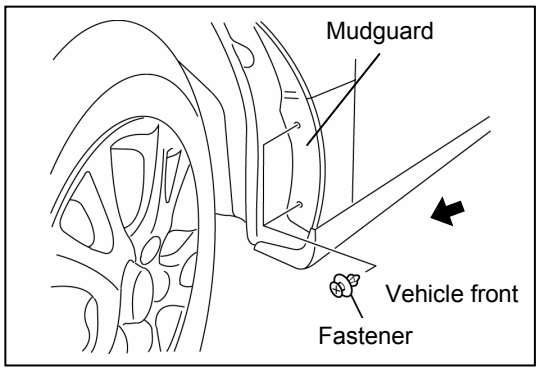

3. Remove the mudguard installation fastener (2).

⚠ CAUTION

- The removed fasteners (2) are not reused to install this accessory.

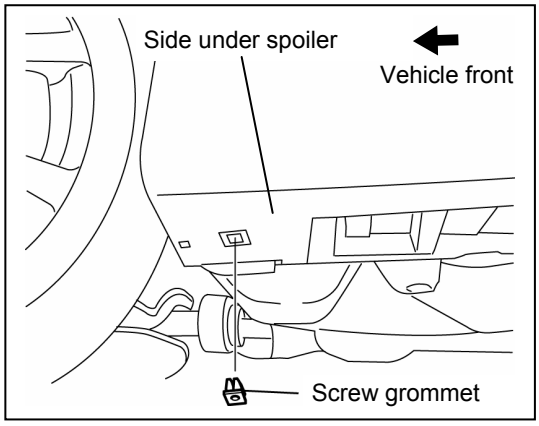

4. Press in the screw grommet into the square hole on the bottom surface of the side under spoiler.

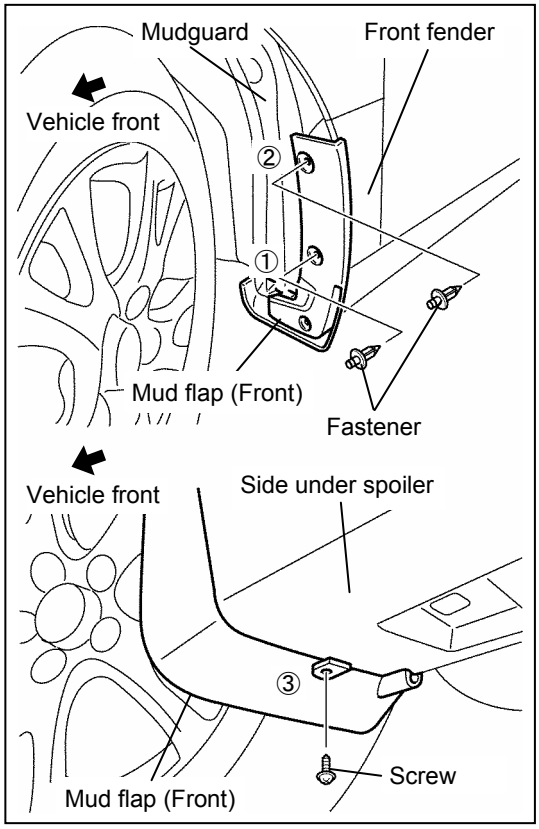

5. Align the mud flap (front) with the front fender, mudguard, and side under spoiler screw grommet installation holes, then temporarily install the kit accessory fastener (2) and screw (1).
6. Install the mud flap (front) in the order shown in the figure on the left while pressing it against the front fender.

Tightening torque

Screw : 0.6－0.9 N·m {6.2－9.1 kgf·cm · 5.4 – 7.9 in·lbf}

⚠ CAUTION

- Make sure the screw is tightened securely.
  Make sure to tighten to the specified torque. If tightened outside the specified torque, the mud flap (front) could be damaged or fall off.
- Do not remove the double-sided adhesive tape backing from the backside of the mud flap (front) in this step.

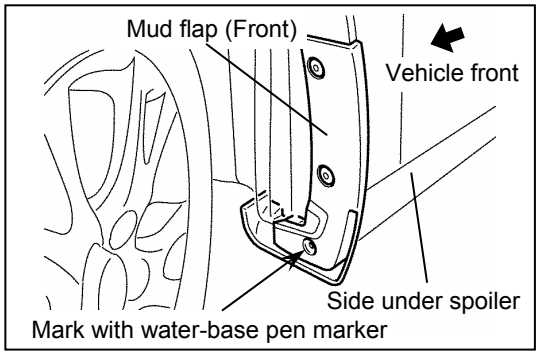

7. Mark the center of the side under spoiler installation position (center of installation hole for mud flap (front) fastener) with a water-base pen marker.

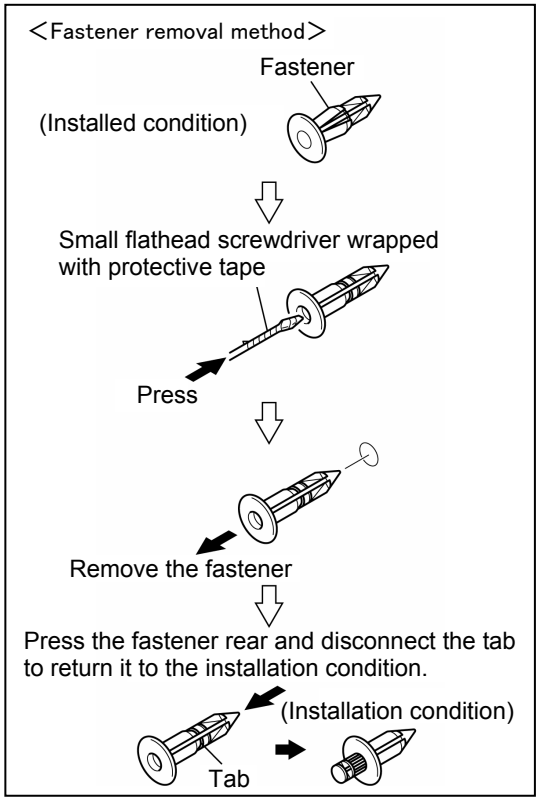

8. Remove the mud flap (front) installed in Step 6.
   (When removing fasteners, refer to <Fastener removal method> in the figure on the left.)

9. Tap the location marked with the water-base pen marker in the center with a punch.
10. Wrap the drill bit with duct tape as shown in the figure.

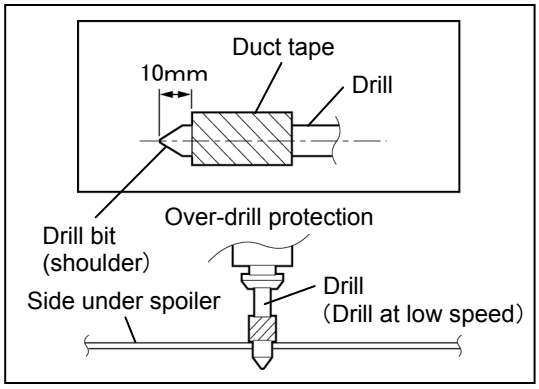

⚠ CAUTION

- Be careful when handling drills and other sharp objects.
- To prevent scratching and over-drilling, always wrap the drill bit with duct tape.

11. Drill a hole in the mark tapped with the punch in stages using a drill.

Drill hole diameter: From 3 mm to 8 mm diameter (1 location)

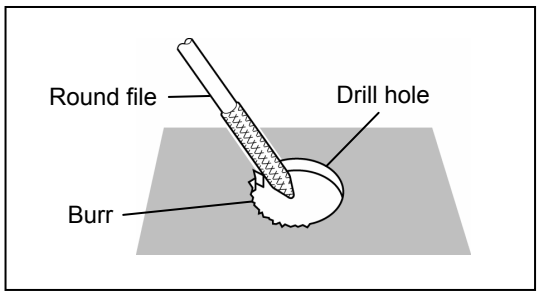

12. Remove any burrs around the drilled hole with a round file.

⚠ CAUTION

- Always remove burrs from the side under spoiler surface using a round file so that the mud flap (front) installation surface is flat.

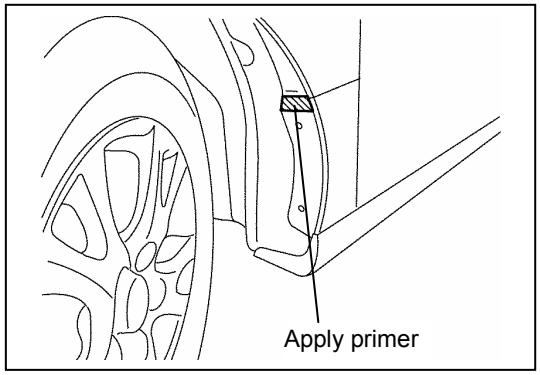

13. Apply primer to the double-sided adhesive tape adhesion surface of the mudguard.

⚠ CAUTION

- Always apply primer to provide the necessary adhesive strength when adhering.
- Do not apply primer to areas outside of the application area due to the area becoming discolored.

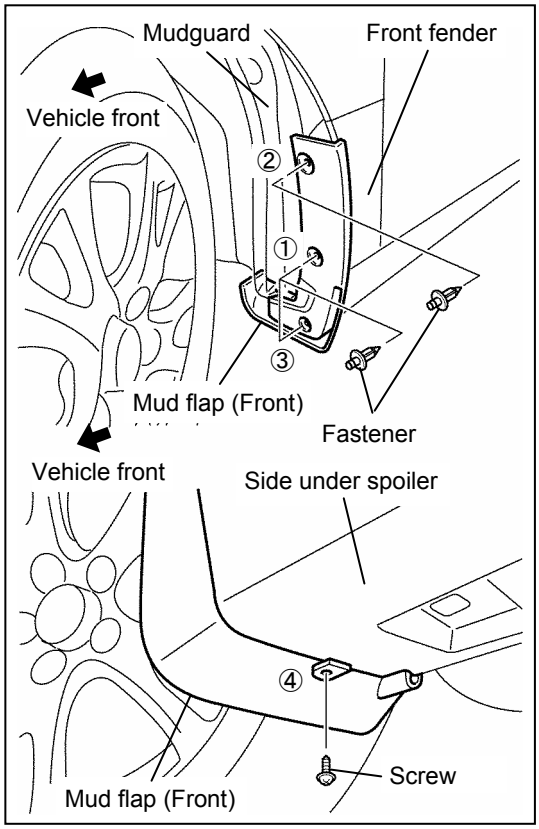

14. Remove the double-sided adhesive tape backing from the backside of the mud flap (front).
15. Realign the mud flap (front) with the front fender, mudguard, and side under spoiler screw grommet installation holes, then install the kit accessory ①fastener (1).
16. Install ②fastener (1) while aligning the upper part of the mud flap (front) to the body, then press the upper part of the mud flap (front) to affix the double-sided adhesive tape.
17. While aligning the upper part of the mud flap (front) to the body, install ③fastener (1) and tighten ④screw (1).

Tightening torque

Screw : 0.6－0.9 N·m {6.2－9.1 kgf·cm · 5.4 – 7.9 in·lbf}

⚠ CAUTION

- Make sure the screw is tightened securely.
  Make sure to tighten to the specified torque. If tightened outside the specified torque, the mud flap (front) could be damaged or fall off.

4. CONFIRMATION AFTER INSTALLATION

1. Be sure that here are no excessive gaps.

- If there are any gaps, loosen the screw (1) and the fastenres (3), reinstall them while pressing the mud flap (front) against the front fender. (Do not remove the double-sided adhesive tape.)

2. Be sure that all screws and fasteners are securely tightened.

5. MUD FLAP (FRONT) PRECAUTIONS

⚠ CAUTION

- If gasoline, engine coolant, or battery fluid adheres to the painted surface of the resin parts, it will cause discoloration, stains. Wipe it off with a soft cloth immediately.
- Don't drive through an automatic car wash; it may damage the mud flap (front).
- If the vehicle height is lowered due to the vehicle being at maximum passenger or cargo capacity, decrease the vehicle speed when parking on a road shoulder or entering/leaving a road shoulder or bump. Otherwise, the mud flaps (front) could be damaged.

INSTALLATION INSPECTION SHEET	MAZDA6	Mud Flaps, Front
		GS3L V3 450

A. Vehicle parts reinstallation

- Install removed vehicle parts in the reverse order of “VEHICLE PARTS REMOVAL”.

Check

⚠ CAUTION

- Make sure that the vehicle parts are clean before reinstalling. Clean any dirty parts.
- Verify that the connectors are securely connected.

B. Inspection after installation

- Inspect the installed / reinstalled parts for the following items.

Inspection Parts	Check Item（○）			
	Clearance/Fit	Scratches / Dirt	Installation / Engagement	Screw, fastener tightening
Mud flap (Front)	○	○	○	○
Mudguard	○	○	○	○

C. Important check items

- Inspect the installed / reinstalled parts for the following items.

Section	Parts Name	Tightening torque	Check and write the tightening torque	Person in charge
Installation of the Mud Flaps, Front	Screw	0.6－0.9 N･m 6.2－9.1 kgf･cm 5.4 – 7.9 in･lbf	N･m kgf･cm in･lbf	

Installation inspection sheet for Mud Flaps, Front

Date , ,					
VIN.					
Approved		Checked		Person in charge	

The term of validity for this sheet: 12 months