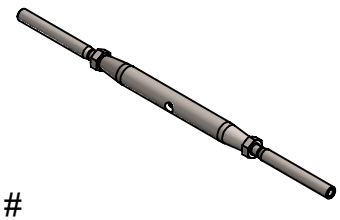

PART #
731939

PIECES INCLUDED:	QTY.
732042- FIELD SWAGED THREADED TENSIONER 1/8"	2
TURNBUCKLE NUT 1/8"	2
TURNBUCKLE BODY 1/8"	1

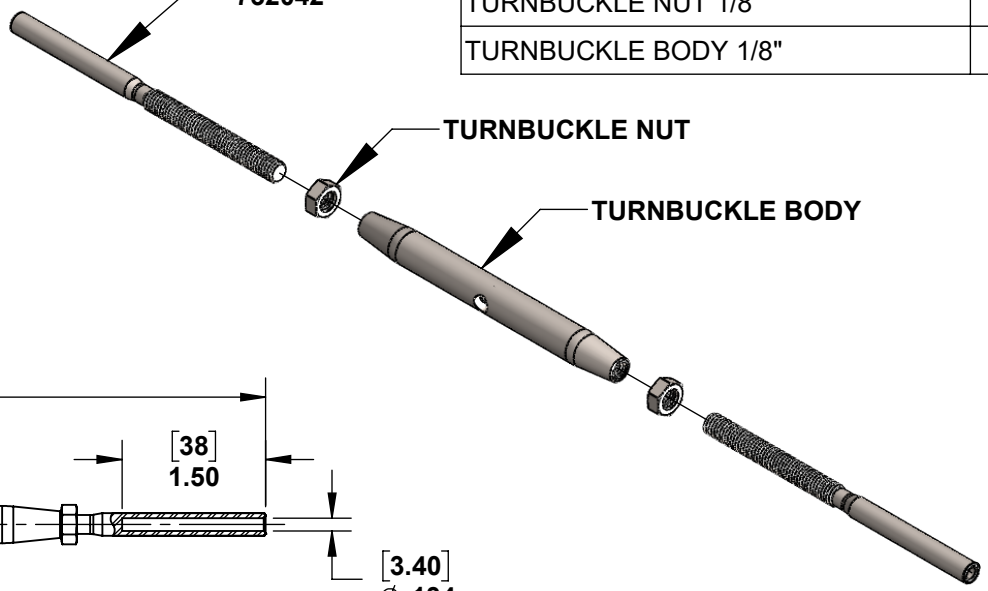

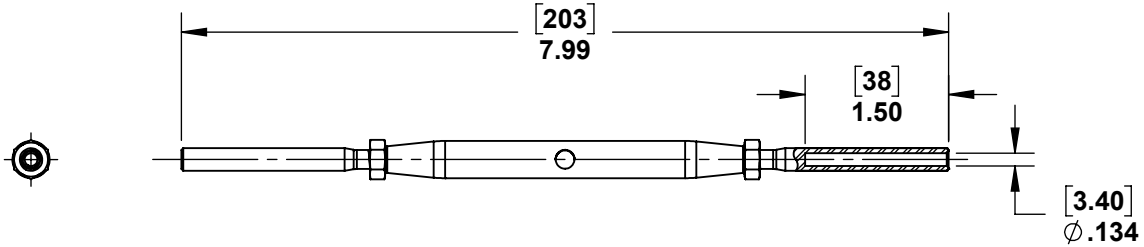

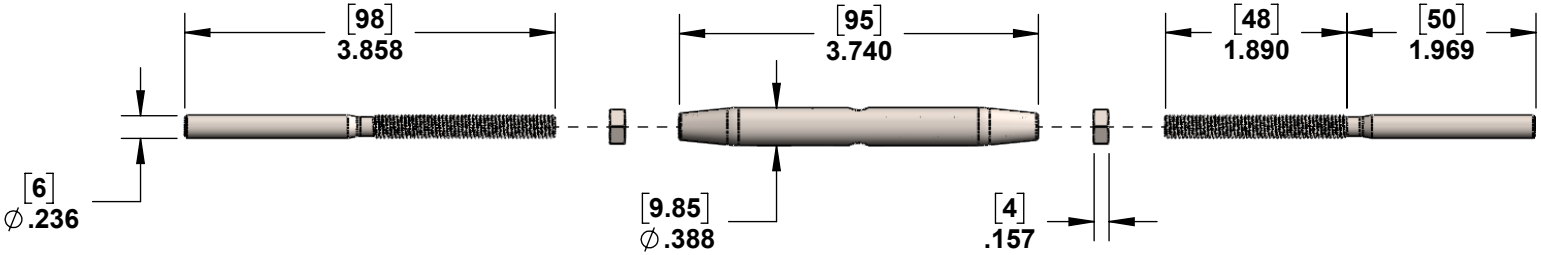

SC&R Stainless Cable & Railing

PROPRIETARY AND CONFIDENTIAL

THE INFORMATION CONTAINED IN THIS DRAWING IS THE SOLE PROPERTY OF STAINLESS CABLE AND RAILING®. ANY REPRODUCTION IN PART OR AS A WHOLE WITHOUT THE WRITTEN PERMISSION OF STAINLESS CABLE AND RAILING® IS PROHIBITED.

NOTES: UNLESS OTHERWISE SPECIFIED

1. DUAL DIMENSIONS SHOWN - INCHES [MM].
2. MACHINED SURFACES TO BE 63uIN MAX.
3. PART TO BE FREE OF BURRS AND SHARP EDGES.
4. ALL MATERIAL TO BE CLEAN, DEGREASED AND FREE OF ALL IMPURITIES.
5. ANY CHANGE MUST BE AUTHORIZED BY AN SC&R ENGINEER.

DIMENSIONS ARE IN INCHES
FRACTIONAL ±
ANGULAR: MACH ±
TWO PLACE DECIMAL ±
THREE PLACE DECIMAL ±

MATERIAL

FINISH

	NAME	DATE
DRAWN	SCR	10/12/22
ENG APPR.		
MFG APPR.		

COMMENTS:

TITLE:
CLASSIC INLINE TURNBUCKLE - FOR 1/8" CABLE RAILING

SIZE	DWG. NO.	REV
A	731939	01

SCALE: 1:2 | WEIGHT: | SHEET 1 OF 1